Altistart 22

Soft start - soft stop unit

User manual

01/2014

BBV51330

www.schneider-electric.com

Content

Important Information

NOTICE

Read these instructions carefully, and look at the equipment to become familiar with the device before trying to install, operate, or maintain it. The following special messages may appear throughout this documentation or on the equipment to warn of potential hazards or to call attention to information that clarifies or simplifies a procedure.

The addition of this symbol to a Danger or Warning safety label indicates that an electrical hazard exists, which will result in personal injury if the instructions are not followed.

This is the safety alert symbol. It is used to alert you to potential personal injury hazards. Obey all safety messages that follow this symbol to avoid possible injury or death.

⚠ DANGER

DANGER indicates an imminently hazardous situation, which, if not avoided, **will result** in death or serious injury.

⚠ WARNING

WARNING indicates a potentially hazardous situation, which, if not avoided, **can result** in death, serious injury or equipment damage.

⚠ CAUTION

CAUTION indicates a potentially hazardous situation, which, if not avoided, **can result** in injury or equipment damage.

NOTICE

NOTICE, used without the safety alert symbol, indicates a potentially hazardous situation which, if not avoided, **can result** in equipment damage.

PLEASE NOTE

Electrical equipment should be installed, operated, serviced, and maintained only by qualified personnel. No responsibility is assumed by Schneider Electric for any consequences arising out of the use of this product.

Before you begin

Read and understand these instructions before performing any procedure with this soft starter.

⚠ ⚠ DANGER

HAZARD OF ELECTRIC SHOCK, EXPLOSION, OR ARC FLASH

- Only appropriately trained persons who are familiar with and understand the contents of this manual and all other pertinent product documentation and who have received safety training to recognize and avoid hazards involved are authorized to work on and with this soft starter system. Installation, adjustment, repair, and maintenance must be performed by qualified personnel.
- The system integrator is responsible for compliance with all local and national electrical code requirements as well as all other applicable regulations with respect to grounding of all equipment.
- Many components of the product, including the printed circuit boards, operate with mains voltage. Do not touch. Use only electrically insulated tools.
- Do not touch unshielded components or terminals with voltage present.
- AC voltage can couple voltage to unused conductors in the motor cable. Insulate both ends of unused conductors of the motor cable.
- Before performing work on the soft starter system:
  - Disconnect all power, including external control power that may be present.
  - Place a "Do Not Turn On" label on all power switches.
  - Lock all power switches in the open position.
- Install and close all covers before applying power voltage.

Failure to follow these instructions will result in death or serious injury.

⚠ DANGER

UNINTENDED EQUIPMENT OPERATION

- Read and understand this manual before installing or operating the Altistart 22.
- Any changes made to the parameter settings must be performed by qualified personnel.

Failure to follow these instructions will result in death or serious injury.

⚠ WARNING

DAMAGED SOFT STARTER EQUIPMENT

Do not operate or install any soft starter or soft starter accessory that appears damaged.

Failure to follow these instructions can result in death, serious injury, or equipment damage.

⚠ WARNING

LOSS OF CONTROL

- The designer of any control scheme must
  - consider the potential failure modes of control paths and, for certain critical control functions,
  - provide a means to achieve a safe state during and after a path failure.

Examples of critical control functions are emergency stop and overtravel stop.

- Separate or redundant control paths must be provided for critical control functions.
- System control paths may include communication links. Consideration must be given to the implications of unanticipated transmission delays or failures of the link. (1)
- Each implementation of an ATS22 soft starter must be individually and thoroughly tested for proper operation before being placed into service.

Failure to follow these instructions can result in death, serious injury, or equipment damage.

(1) For additional information, refer to NEMA ICS 1.1 (latest edition), “Safety Guidelines for the Application, Installation, and Maintenance of Solid State Control”.

Documentation structure

The following Altistart 22 technical documents are available on the Schneider Electric website (www.schneider-electric.com).

User manual

This manual describes how to install, commission, operate, and program the soft starter.

Quick Start guide

This document (S1A10388) is delivered with the soft starter, and you can download it on www.schneider-electric.com.

Quick Start annex

Annex for UL 508 with SCCR (Short Circuit Current Ratings) and branch circuit protection).

This document (S1A14738) is delivered with the soft starter, and you can download it on www.schneider-electric.com.

Steps for setting up the soft starter (also refer to Quick Start guide)

Steps **1** to **4** are performed with the **power off**.

1. Receive and Inspect the soft starter

- ☐ Check that the soft starter reference on the nameplate is similar to the purchase order.
- ☐ Remove the Altistart 22 from packaging and check that it has not been damaged

2. Check the line voltage compatibility

- ☐ Check that the line voltage, and control voltage are compatible with the soft starter (pages 11 to 13).

3. Mount the soft starter vertically

- ☐ Mount the soft starter in accordance with the instructions in this document (page 17).

4. Wire the soft starter (page 29)

- ☐ Connect the motor, ensuring that its connections correspond to the voltage.
- ☐ Connect the line supply, after making sure that the power is off.
- ☐ Check and Connect the control supply on CL1-CL2

5. Configure the soft starter

(page 45)

- ☐ Power on control, and do not give a start command.
- ☐ Adjust U In line voltage.
- ☐ Adjust In motor rated current.

6. Start

Receiving and handling

Introduction

The ATS22 offers acceleration and deceleration control of standard three-phase asynchronous induction (squirrel cage) motors. The ATS22 controls the motor performance based on the motor torque rather than simple voltage or current based control. Advanced control algorithms are incorporated to help smooth rotation throughout the starting ramp and reducing mechanical instability at the end of starting.
A digital keypad display is provided for soft starter setup and motor performance display.
The ATS22 is available in 15 rated currents from 17 to 590 A. ATS22 are rated for use from 208 to 600 V motors, and are self-adjusting for a 50 Hz or 60 Hz supply frequency.
This user manual covers the technical characteristics, specifications, installation, wiring, programming, and troubleshooting of ATS22.

Terminology

Some of the terms and acronyms used in this manual are defined in the table below:

Term	Definition
Soft starter FLA	Soft starter Full Load Amps This value is on the soft starter nameplate IcL. I_{cL} : Soft starter rated current
Motor FLA	Motor Full Load Amps This value is on the motor nameplate. The rated current of an induction motor at rated speed and load. Soft starter in line connection: I_n = rated current of the motor FLA. Soft starter inside delta connection: I_n = rated current of the motor FLA / $\sqrt{3}$.
OCPD	Overcurrent protective device.

Receiving and Preliminary Inspection

Before installing the ATS22 soft starter, read this manual and follow all precautions.
Before removing the ATS22 soft starter from its packing material, verify that the packing carton is not damaged from shipping. Damage to the packing carton usually indicates improper handling. If any damage is found, notify the carrier and your Schneider Electric representative.
After removing the ATS22 soft starter from its packaging, inspect it for damage. If any shipping damage is found, notify the carrier and your sales representative. Verify that the ATS22 soft starter nameplate and label conform to the packing slip and corresponding purchase order.

⚠ WARNING

DAMAGED SOFT STARTER EQUIPMENT

Do not operate or install any soft starter that appears damaged.

Failure to follow these instructions can result in death, serious injury, or equipment damage.

Storing and Shipping

If the ATS22 soft starter is not being immediately installed, store it in a clean, dry area where the ambient temperature is between -25 °C and +70 °C (-13 °F and +158 °F).
If the ATS22 soft starter must be shipped to another location, use the original shipping material and carton to help protect it.

Soft starter catalog numbers

Catalog numbers are composed with:

Soft starter rating (1)
Power and control voltage

Product symbol

A	T	S	2	2							
									Q		
									S	6	
									S	6	U

230-440 V, 230 Vac control supply, 24 Vdc logic inputs

208-600 V, 230 Vac control supply, 24 Vdc logic inputs

208-600 V, 110 Vac control supply, 110 Vac logic inputs

(1) The range is composed of 5 physical frame sizes distributed in 15 ratings from D17 to C59 (see page 11).

Handling the soft starter

Hoisting the ATS22

The ATS22 range comprises 5 frame sizes, with various weights and dimensions.
Small soft starters can be removed from their packaging and installed without a handling device. A handling device must be used from ATS22C21●●● to ATS22C59●●●; for this reason they are supplied with lifting holes.

⚠ WARNING

HANDLING AND LIFTING HAZARD

Keep the area below any equipment being lifted clear of all personnel and property. Use the lifting method as shown below.

Failure to follow these instructions can result in death, serious injury, or equipment damage.

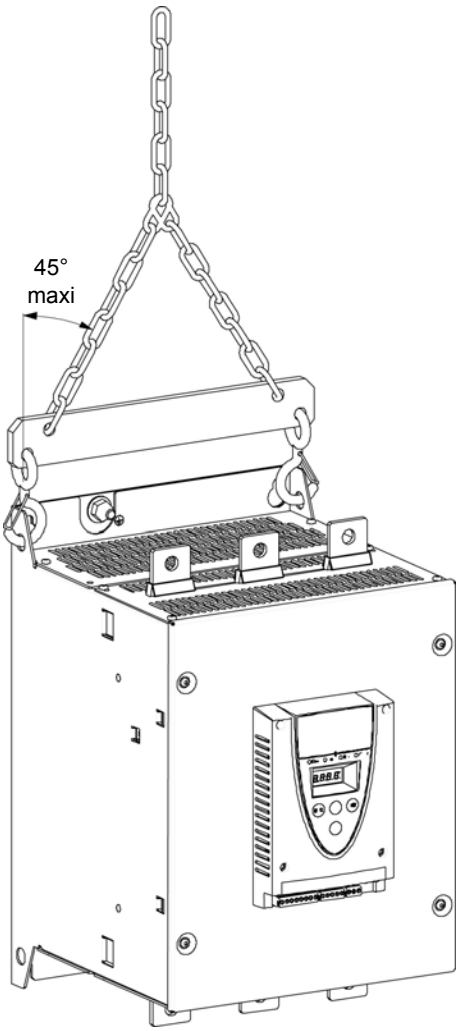

Do not remove the ATS22 from the carton until it is at the final installation site. Handle the soft starter carefully after removing it from the carton to avoid damage to the internal components, frame, or exterior. Once removed from the carton, the soft starter can be handled:

- With a hoist. When hoisting the soft starter, attach a spreader bar to the two lifting holes on top as shown below.
- In a horizontal position, with the back of the soft starter resting on a pallet.

Package content

- Soft starter
- Quick Install guide
- Package of screws for frame sizes C, D, and E
- Allen key, supplied with size B products

Torque characteristic

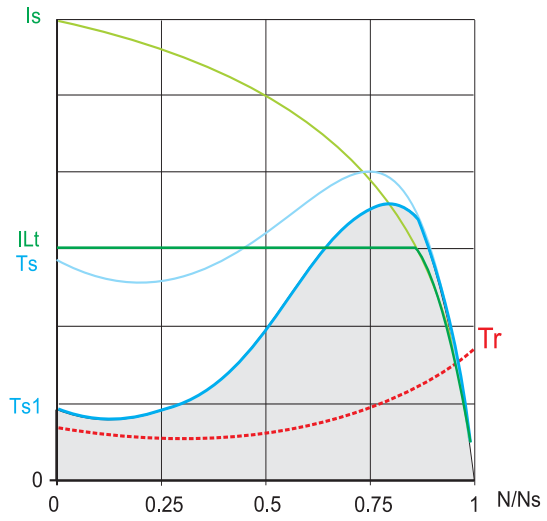

Ts and **Is**: Direct on line starting of an asynchronous motor.

Ts1: Total torque range available with an Altistart 22, which is dependent on the limiting current ILt, page 51.
The progression of the soft starter is controlled by the motor torque within this range.

Tr: Resistive torque, which must always be less than the Ts1 torque.

Soft starter selection

S1 motor duty corresponds to starting followed by operation at constant load enabling the thermal stability to be reached.
S4 motor duty corresponds to a cycle comprising starting, operation at constant load, and an idle period. This cycle is characterized by a load factor.
The Altistart 22 must be selected depending on the type of application ("standard" or "severe") and the nominal power of the motor. "Standard" or "severe" applications define the limiting values of the current and the cycle for motor duties S1 and S4. These duties are described in the IEC 60034-1.

Standard application

Example: centrifugal pump
In standard application, the Altistart 22 is designed to provide:
• in S1 duty: starting at 3.5 In for 40 seconds from a cold state.
• in S4 duty: a load factor of 90% and **n** starts per hour (see table below), with 3.5 In for 20 seconds or an equivalent thermal cycle.
In this case, the motor thermal protection must conform to protection class 10.

:

Framesize	In S4 duty, number of starts (1) per hour	
	Standard	With fan
A	6	10
B	6	10
C	4	10
D	NA	4
E	NA	4

(1) Note: in case of both soft starts and soft stops, the number of starts has to be divided by 2.

Severe application

The Altistart 22 rated current is limited to 3.5 IcL, see table page 19. IcL is the nominal current of the Altistart 22. If the application requires a higher rated starting current (> 3.5 IcL), the soft starter must be oversized. See soft starter selection table, page 11.

Soft starter sizing according to thermal protection class

Starting current	Protection class		
	Class 10	Class 20	Class 30
⩽ 3.5 In max starting time	Nominal* 16 s	Nominal + 1** 32 s	Nominal + 2*** 48 s

* Nominal = nominal size of the soft starter according to the nominal motor current (Motor FLA).
** Nominal + 1 = oversize the soft starter by one rating compared to the nominal motor current (Motor FLA).
*** Nominal + 2 = oversize the soft starter by 2 ratings compared to the nominal motor current (Motor FLA).

Standard application, Altistart 22•••Q, 230/440 V supply, soft starter in line connection

Motor			Altistart 22•••Q, 230/440 V (+ 10% - 15%) - 50/60 Hz (+/- 10%)		
Nominal motor power			Motor nominal current In (Motor FLA)	Soft starter rated current IcL (Soft starter FLA)	Reference
230 V	400 V	440 V			
kW	kW	kW	A	A	
4	7.5	7.5	14.8	17	ATS22D17Q
7.5	15	15	28.5	32	ATS22D32Q
11	22	22	42	47	ATS22D47Q
15	30	30	57	62	ATS22D62Q
18.5	37	37	69	75	ATS22D75Q
22	45	45	81	88	ATS22D88Q
30	55	55	100	110	ATS22C11Q
37	75	75	131	140	ATS22C14Q
45	90	90	162	170	ATS22C17Q
55	110	110	195	210	ATS22C21Q
75	132	132	233	250	ATS22C25Q
90	160	160	285	320	ATS22C32Q
110	220	220	388	410	ATS22C41Q
132	250	250	437	480	ATS22C48Q
160	315	355	560	590	ATS22C59Q

The nominal motor current In must not exceed the maximum permanent current in class 10.
See wiring page 30.

Maximum surrounding temperature

The information in the table above is based on operation at a maximum ambient temperature of 40 °C (104 °F) and mini. -10 °C (14 °F). The Altistart 22 can be used up to an ambient temperature of 60 °C (140 °F) as long as the max. permanent current in class 10 is derated by 2.2% for each degree above 40 °C (104 °F).

Example: ATS22D32Q at 50 °C (122 °F) derated by 10 x 2.2% = 22%, 32 A becomes 32 x (1-0.22) = 24.96 A (max. nominal motor current).

Standard application, Altistart 22•••Q, 230/440 V supply, soft starter inside delta connection

Only the Altistart 22•••Q can be installed inside delta connection.

NOTICE

RISK OF DAMAGE TO THE MOTOR

ATS22•••S6 and ATS22•••S6U must not be installed inside delta connection.

Failure to follow these instructions can result in equipment damage.

Motor			Soft starter 230/440 V (+ 10% - 15%) - 50/60 Hz (+/- 10%)			
Nominal motor power			Line current (Motor FLA) (1)	In setting (Line current/√3)	Soft starter rated current IcL (soft starter FLA)	Soft starter reference
230 V	400 V	440 V				
kW	kW	kW	A	A	A	
5.5	11	15	25	14.4	17	ATS22D17Q
11	22	22	48	27.7	32	ATS22D32Q
18.5	45	45	70	40.4	47	ATS22D47Q
22	55	55	93	53.7	62	ATS22D62Q
30	55	75	112	64.7	75	ATS22D75Q
37	75	75	132	76.2	88	ATS22D88Q
45	90	90	165	95.3	110	ATS22C11Q
55	110	110	210	121.2	140	ATS22C14Q
15	132	132	255	147.2	170	ATS22C17Q
90	160	160	315	181.9	210	ATS22C21Q
110	220	220	375	216.5	250	ATS22C25Q
132	250	250	480	277.1	320	ATS22C32Q
160	315	355	615	355.1	410	ATS22C41Q
220	355	400	720	415.7	480	ATS22C48Q
250	400	500	885	511.0	590	ATS22C59Q

(1) Line current is maximum 1.5 IcL. Also, the In setting must not exceed IcL.
Example: for a 400 V - 110 kW motor with a line current of 195 A, the minimum soft starter rated current, IcL = 195/1.5 = 130 A.
Thus select ATS22C14Q

The nominal motor current In must not exceed the max. permanent current in class 10.
See wiring page 26.

Maximum surrounding temperature

The information in the table above is based on operation at a maximum ambient temperature of 40 °C (104 °F) and mini. -10 °C (14 °F). The Altistart 22 can be used up to an ambient temperature of 60 °C (140 °F) as long as the max. permanent current in class 10 is derated by 2.2% for each degree above 40 °C (104 °F).

Example: ATS22D32Q at 50 °C (122 °F) derated by 10 x 2.2% = 22%, 48 A becomes 48 x 0.78 = 37.5 A (max. nominal motor current).

Standard application, 208/600 V supply, soft starter in line connection

Motor								Soft starter 208/600 V (+ 10% - 15%) 50/60 Hz (+/- 10%)		
Nominal motor power								Motor nominal current In (Motor FLA)	Soft starter rated current IcL (Soft starter FLA)	Soft starter reference
208 V	230 V	230 V	400 V	440 V	460 V	500 V	575 V			
HP	HP	kW	kW	kW	HP	kW	HP	A	A	
3	5	4	7.5	7.5	10	9	15	14	17	ATS22D17S6 or S6U
7.5	10	7.5	15	15	20	18.5	25	27	32	ATS22D32S6 or S6U
(1)	15	11	22	22	30	30	40	40	47	ATS22D47S6 or S6U
15	20	15	30	30	40	37	50	52	62	ATS22D62S6 or S6U
20	25	18.5	37	37	50	45	60	65	75	ATS22D75S6 or S6U
25	30	22	45	45	60	55	75	77	88	ATS22D88S6 or S6U
30	40	30	55	55	75	75	100	96	110	ATS22C11S6 or S6U
40	50	37	75	75	100	90	125	124	140	ATS22C14S6 or S6U
50	60	45	90	90	125	110	150	156	170	ATS22C17S6 or S6U
60	75	55	110	110	150	132	200	180	210	ATS22C21S6 or S6U
75	100	75	132	132	200	160	250	240	250	ATS22C25S6 or S6U
100	125	90	160	160	250	220	300	302	320	ATS22C32S6 or S6U
125	150	110	220	220	300	250	350	361	410	ATS22C41S6 or S6U
150	-(1)	132	250	250	350	315	400	414	480	ATS22C48S6 or S6U
(1)	200	160	315	355	400	400	500	477	590	ATS22C59S6 or S6U

(1) Value not indicated when there is no corresponding standardized motor.

The nominal motor current In must not exceed the max. permanent current in class 10.

Maximum surrounding temperature

The information in the table above is based on operation at a maximum ambient temperature of 40 °C (104 °F) and mini. -10 °C (14 °F).
The Altistart 22 can be used up to an ambient temperature of 60 °C (140 °F) as long as the max. permanent current in class 10 is derated by 2.2% for each degree above 40 °C (104 °F).
Example: ATS22D32S6 at 50 °C (122 °F) derated by 10 x 2.2% = 22%, 27 A becomes 27 x 0.78 =21.06 A (max. nominal motor current).

ATS22D17 to D88

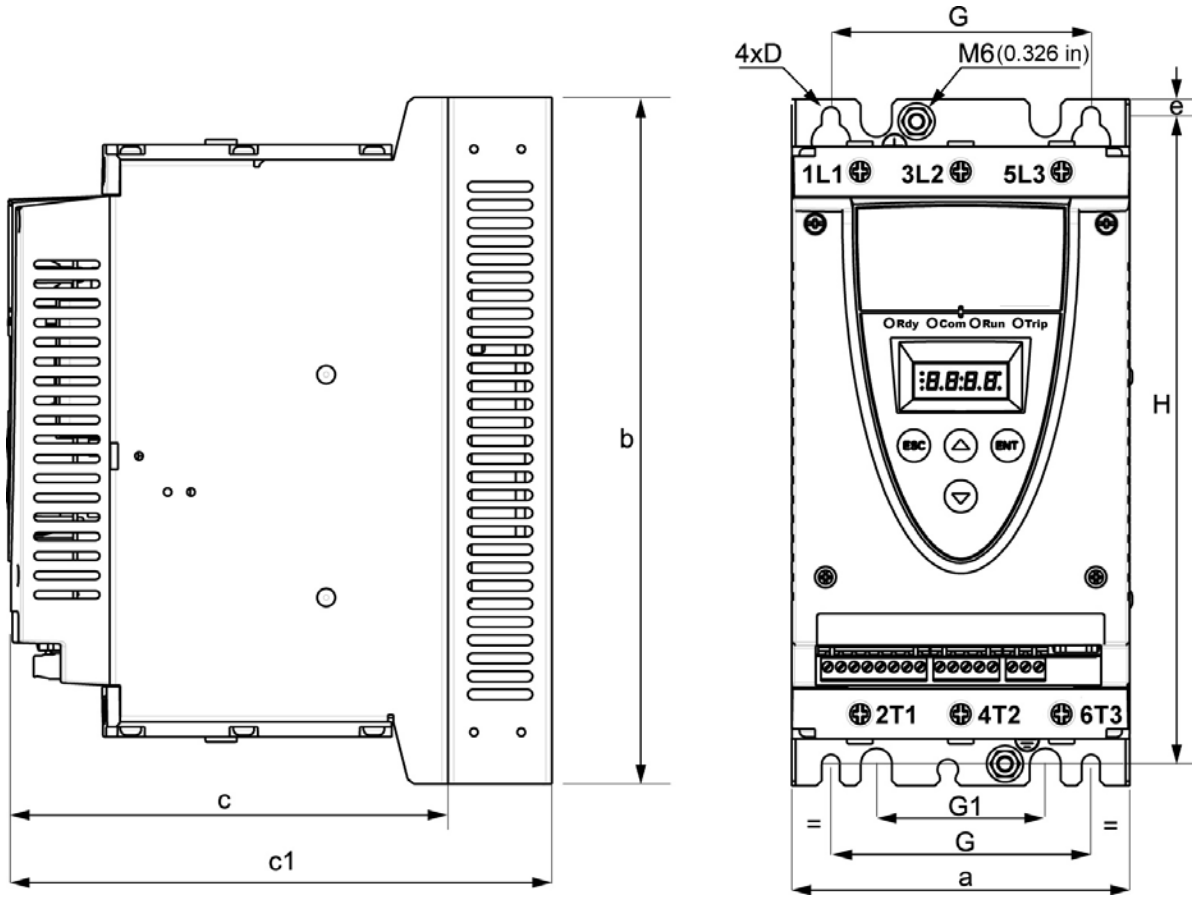

For frame sizes D17 to D88, the fan is sold separately. (1)

ATS22	Frame size	a	b	c	c1	e	H	Standard G	With fan G1	D mm	Weight
		mm (in.)	mm (in.)	mm (in.)	mm (in.)	mm (in.)	mm (in.)	mm (in.)	mm (in.)	mm (in.)	kg (lb)
D17	A	130 (5.1)	265 (10.4)	169 (6.6)	209 (8.2)	6.5 (0.3)	250 (9.8)	100 (3.9)	65 (2.6)	7 (0.28)	5.5 (12.1)
D32	A										
D47	A										
D62	B	145 (5.7)	295 (11.6)	207 (8.1)	247 (9.7)	10.5 (0.4)	276 (10.9)	115 (4.5)	80 (3.15)	7 (0.28)	7.8 (17.2)
D75	B										
D88	B										

c: dimension of the product alone.
c1: dimension of the product with its fan.
(1) The voltage of the fan has to match the control voltage of the soft starter:
ATS22●●●Q or ATS22●●●S6 Fan 230 V (VW3G22●●●, ●●● = 400 for size A, 401 for size B or 402 for size C)
ATS22●●●S6U Fan 110 V (VW3G22U●●●, ●●● = 400 for size A, 401 for size B or 402 for size C)

ATS22C11 to C17

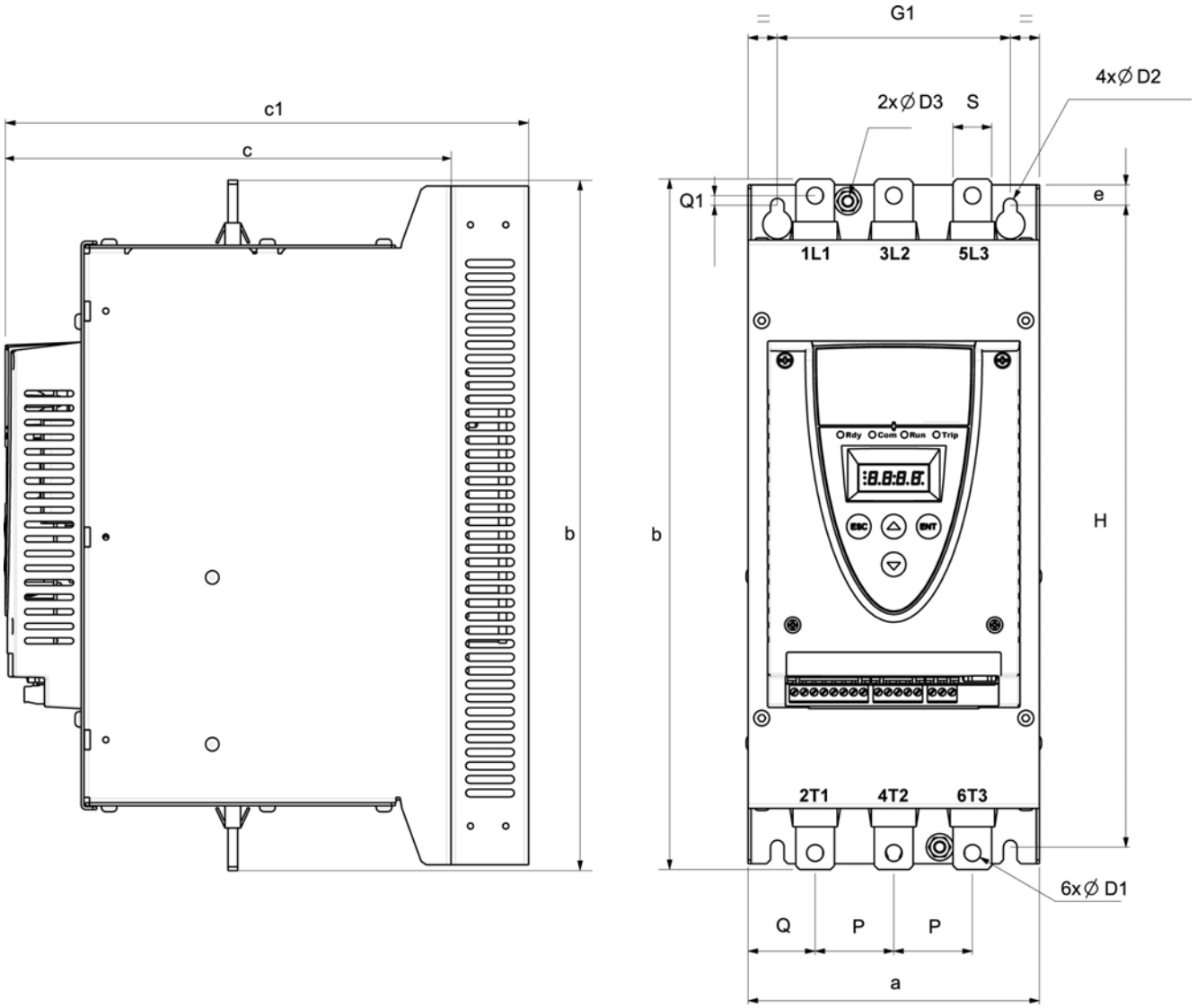

For frame sizes C11 to C17, the fan is sold separately. (1)

ATS22 Frame size C	a	b	c	c1	e	H	G1	P	Q	Q1	S	D1	D2	D3	Weight
	mm (in.)	mm (in.)	mm (in.)	mm (in.)	mm (in.)	mm (in.)	mm (in.)	mm (in.)	mm (in.)	mm (in.)	mm (in.)	mm (in.)	mm (in.)	mm (in.)	kg (lb)
C11	150 (5.9)	356 (14)	229.5 (9)	269.5 (10.6)	10.5 (0.41)	331 (13)	120 (4.7)	40.5 (1.6)	34.5 (1.3)	5 (0.2)	20 (0.8)	9 (0.35)	7 (0.28)	6 (0.23)	12.2 (26.9)
C14															
C17															

c: dimension of the product alone.
c1: dimension of the product with its fan.
(1) The voltage of the fan has to match the control voltage of the soft starter:
ATS22●●●Q or ATS22●●●S6 Fan 230 V (VW3G22●●●, ●●● = 400 for size A, 401 for size B or 402 for size C)
ATS22●●●S6U Fan 110 V (VW3G22U●●●, ●●● = 400 for size A, 401 for size B or 402 for size C)

ATS22C21 to C59

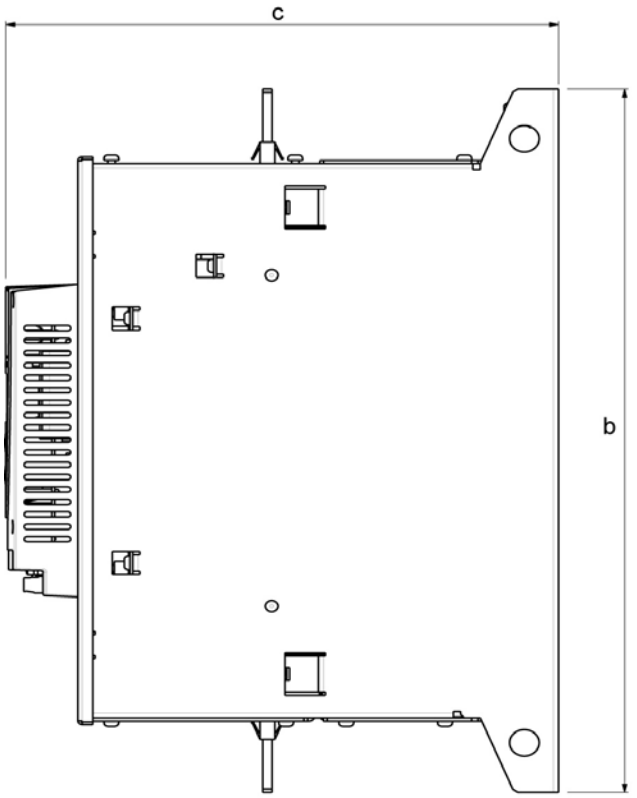

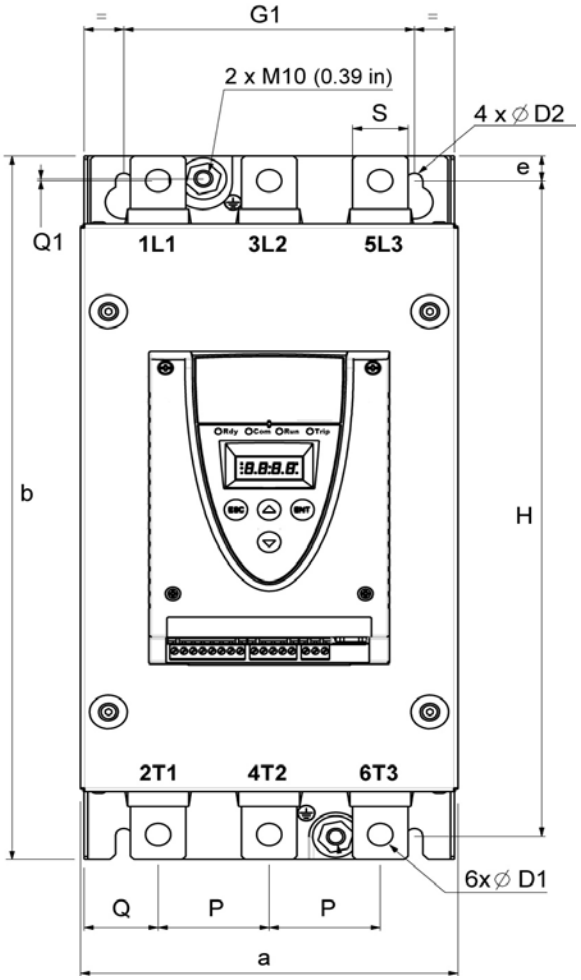

For frame sizes C21 to C59, the fan is integrated.

ATS22	Frame size	a	b	c	e	H	G1	P	Q	Q1	S	D1	D2	Weight
		mm (in.)	mm (in.)	mm (in.)	mm (in.)	mm (in.)	mm (in.)	mm (in.)	mm (in.)	mm (in.)	mm (in.)	mm (in.)	mm (in.)	kg (lb)
C21	D	206 (8.1)	425 (16.7)	299 (11.8)	15 (0.59)	396 (15.6)	157 (6.2)	60 (2.4)	40 (1.6)	1.3 (0.05)	30 (1.2)	13.5 (0.53)	9 (0.35)	20.5 (45.2)
C25	D													
C32	D													
C41	D													
C48	E	304 (11.9)	455 (17.9)	339.7 (13.4)	15 (0.59)	426 (16.8)	264 (10.4)	94 (3.7)	55 (2.2)	1 (0.04)	40 (1.6)	13.5 (0.53)	9 (0.35)	33 (73.3)
C59	E													

Mounting Precautions

Follow these precautions when mounting the ATS22 soft starter:

- The soft starter is compliant with pollution Degree 2 as defined in NEMA ICS1-1 or IEC 60664-1.
- For environment pollution degree 3 install the product inside a cabinet type 12 or IP54.

⚠ ⚠ DANGER

HAZARD OF ELECTRIC SHOCK, EXPLOSION, OR ARC FLASH

ATS22 soft starters are open devices and must be mounted in a suitable enclosure.

Failure to follow these instructions will result in death or serious injury.

- The ATS22 soft starter generates heat and must be properly ventilated. Refer to "Thermal considerations for sizing enclosures" page 19 to determine power dissipated.
- When several soft starters are installed in a control panel, arrange them in a row. Do not stack soft starters. Heat generated from the bottom soft starter can adversely affect the ambient temperature around the top soft starter.
- Install the ATS22 vertically, within ± 10° (other positions are not allowed).
- Do not place it close to heating elements. Leave sufficient free space so that the air required for cooling purposes can circulate from the bottom to the top of the unit.
- Electrical current through the ATS22 will result in heat losses that must be dissipated into the ambient air immediately surrounding the soft starter. To help prevent a thermal fault, provide sufficient enclosure cooling and/or ventilation to limit the ambient temperature around the soft starter.

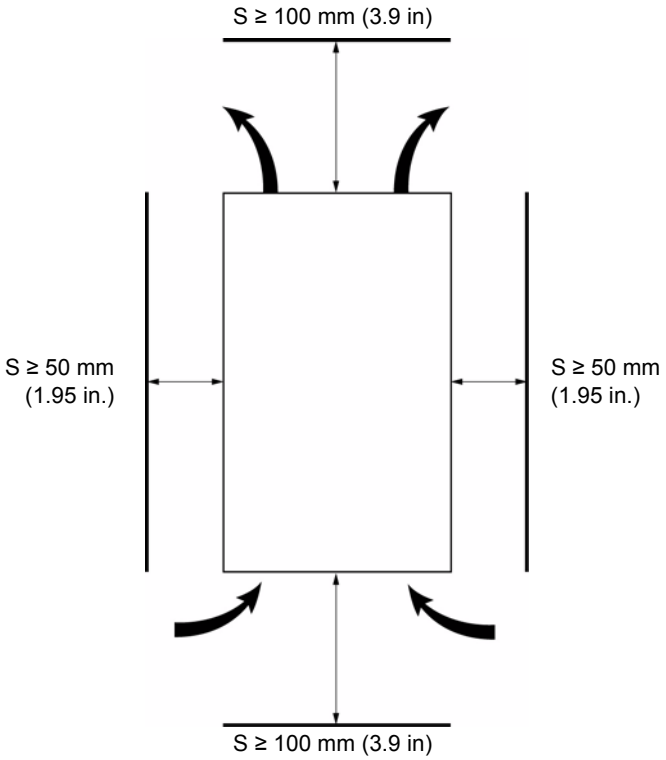

Note: For the soft starters mounted side-by-side, the free space must be ≥ 50 mm (1.95 in.)

⚠ ⚠ DANGER

HAZARD OF ELECTRIC SHOCK, EXPLOSION, OR ARC FLASH

Check that no liquid, dust or conductive object can fall into the soft starter (degree of protection IP00 from above).

Failure to follow these instructions will result in death or serious injury.

Soft starter ventilation

On soft starters installed with a cooling fan, the fan is factory set to switch on automatically as soon as the heatsink temperature reaches 46 °C (114.8 °F).
It is switched off when the heatsink temperature falls back to 43 °C (109.4 °F). This behavior can be modified by adjusting the FAn parameter in IO menu on page 61.

Fan flow rates

Reference	Frame size	Unit	Standard		With optional fan kit	
			110 V	230 V	110 V	230 V
ATS22 D17, D32, D47	A	m^3/hour	-	-	28	31
		CFM (1)	-	-	16	18
ATS22 D62, D75, D88	B	m^3/hour	-	-	28	31
		CFM (1)	-	-	16	18
ATS22 C11, C14, C17	C	m^3/hour	-	-	108	108
		CFM (1)	-	-	64	64
ATS22 C21, C25, C32, C41	D	m^3/hour	148	148	-	-
		CFM (1)	87	87	-	-
ATS22 C48, C59	E	m^3/hour	148	148	-	-
		CFM (1)	87	87	-	-

(1) Cubic Feet / Minute

Mounting in a General Purpose Metal Enclosure

Observe the mounting recommendations on the previous page.

To help proper air circulation in the soft starter:
- Install ventilation grilles.
- Verify that ventilation is adequate: if not install a forced ventilation unit, with a filter if necessary.

Derate the soft starter current IcL by 2.2% per °C for temperatures above 40 °C up to 60 °C (104 °F up to 140 °F).

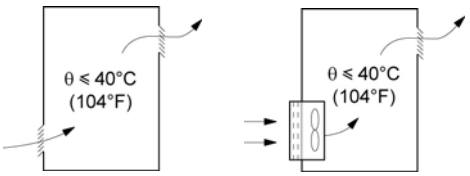

Mounting in a dust and damp-proof metal enclosure

Ventilation for dust and damp- proof enclosure

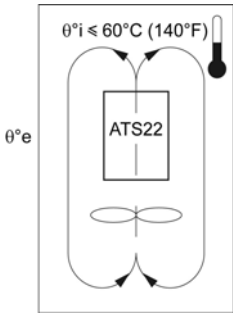

θ°i = internal ambient temperature
θ°e = external ambient temperature

Follow the instructions in this section in order to meet NEMA Type 12 (IP54) degree of protection.
Do not use insulated or non-metallic enclosures as they have poor thermal conduction. Provide a stirring fan to circulate air inside the enclosure and to help prevent hot spots in the soft starter. This allows operation of the soft starter in an enclosure with a maximum internal temperature of 60 °C (140 °F). Ensure that the ambient temperature around the soft starters does not exceed this limit.
Derate the soft starter current I_{cL} by 2.2% per °C for temperatures above 40 °C up to 60 °C (104 °F up to 140 °F).

Thermal considerations for sizing enclosures

When mounting the ATS22 soft starter in an enclosure, use the enclosure manufacturers' recommendations for proper sizing based on thermal considerations. For this, it is necessary to sum the power dissipated by each device in the enclosure. Table hereafter lists the steady state and starting power dissipations for the ATS22 soft starter, operating at rated current.

Power dissipated by the soft starters, at their nominal current

Soft starter reference	Power				Control supply		
	Frame size	I_{cL}	During starting total power at 3.5 I_{cL}	Steady state total power bypass	Electronics	Shorting contactors (1)	Fans
		A	W	W	W	W	W
ATS22D17	A	17	208	5	20	-	14 (2)
ATS22D32	A	32	404	10			
ATS22D47	A	47	562	14			
ATS22D62	B	62	781	19	20	-	20 (2)
ATS22D75	B	75	1016	23			
ATS22D88	B	88	1060	26			
ATS22C11	C	110	1345	33	20	-	20 (2)
ATS22C14	C	140	1548	42			
ATS22C17	C	170	1922	51			
ATS22C21	D	210	2596	63	20	14	20
ATS22C25	D	250	3275	75			
ATS22C32	D	320	3699	96			
ATS22C41	D	410	5147	123			
ATS22C48	E	480	6396	144	20	14	40
ATS22C59	E	590	7599	177			

(1) For ATS22●●●Q, ATS22●●●S6 and ATS22●●●S6U, frame sizes A, B and C the shorting contactor power is included in the electronics.
(2) Optional fan kit

Example: for an ATS22D47

Power dissipated during starting: 562 W
Power dissipated in steady state: 14 W
Power for Control supply: 20 W without fan, 34 W with fan

Example: for an ATS22C48

Power dissipated during starting: 6396 W
Power dissipated in steady state: 144 W
Power for Control supply: 74 W

Fan for frame sizes A, B and C

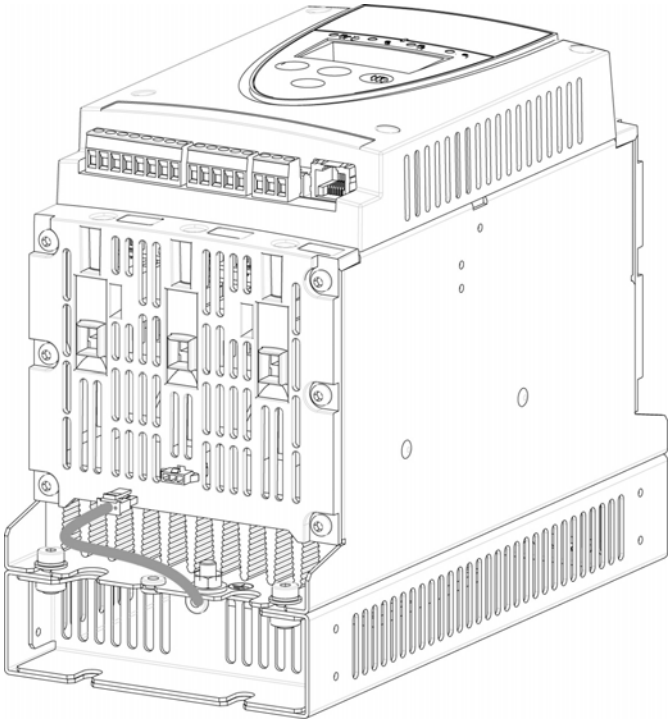

Connections between the fan and the ATS22

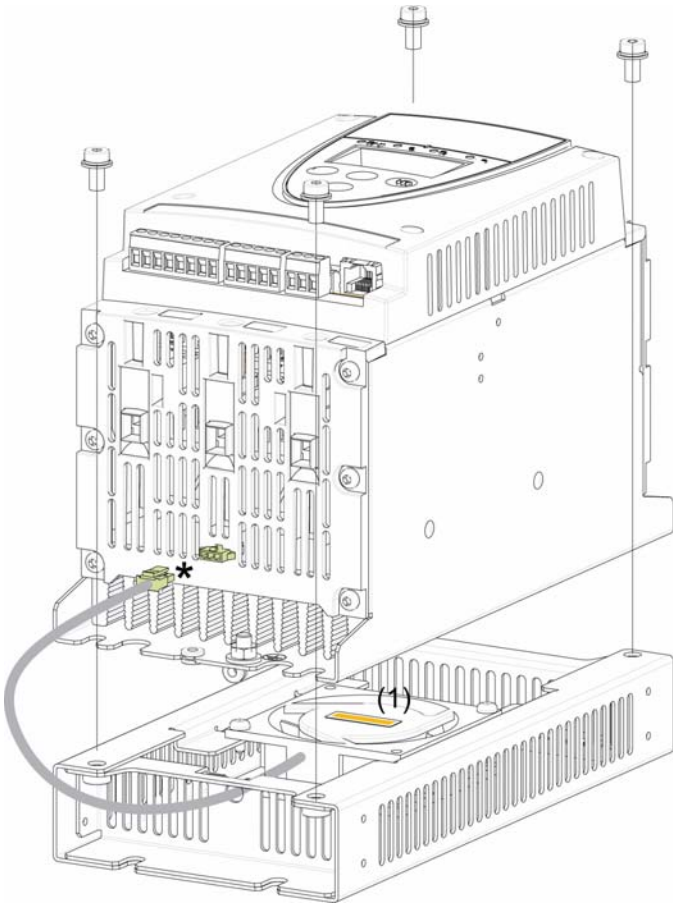

Tightening torque: 3.5 N·m (31 lb.in)

* As 2 different fan options could be connected to the ATS22 according to the fan voltage (matching the ATS22 control voltage), the connector is different according to the voltage, to help avoid wrong assembly and misuse.

(1) The voltage of the fan has to match the control voltage of the soft starter:

ATS22●●●Q or ATS22●●●S6 Fan 230 V
ATS22●●●S6U Fan 110 V

Fan dimensions for frame sizes ATS22D17 to C17

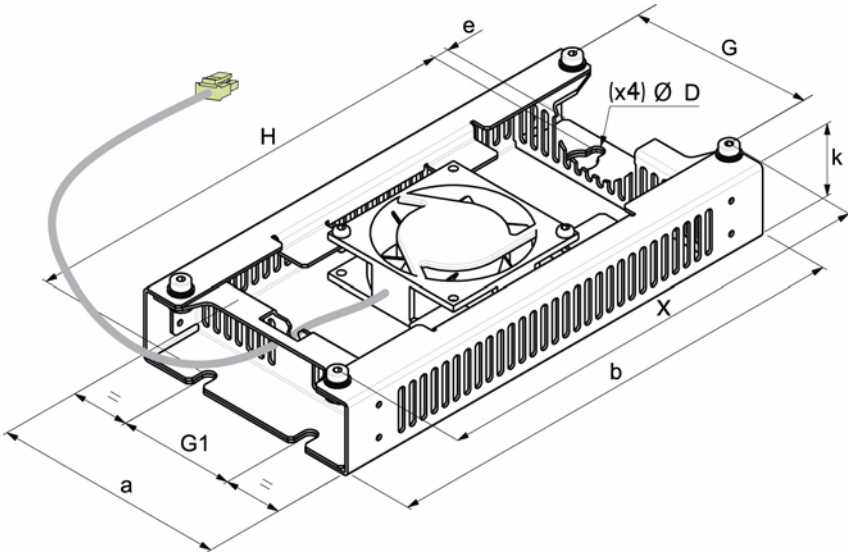

For frame sizes D17 to D88, the fan is sold separately. (1)

Fan kit	ATS22	a	b	k	e	H	G	G1	X	D	Weight
		mm (in.)	mm (in.)	mm (in.)	mm (in.)	mm (in.)	mm (in.)	mm (in.)	mm (in.)	mm (in.)	kg (lb)
A	D17 D32 D47	130 (5.1)	265 (10.4)	40 (1.6)	8.5 (0.33)	248 (9.8)	100 (3.9)	65 (2.6)	250 (9.8)	7 (0.28)	1.2 (2.6)
B	D62 D75 D88	145 (5.7)	295 (11.6)	40 (1.6)	8.5 (0.33)	278 (10.9)	115 (4.5)	80 (3.1)	276 (10.9)	7 (0.28)	1.4 (3.1)
C	C11 C14 C17	150 (5.9)	350 (13.8)	40 (1.6)	8.5 (0.33)	333 (13.1)	120 (4.7)	85 (3.3)	331 (13)	7 (0.28)	1.6 (3.5)

(1) The voltage of the fan has to match the control voltage of the soft starter.
ATS22●●●Q or ATS22●●●S6 Fan 230 V (VW3G22●●●, ●●● = 400 for size A, 401 for size B or 402 for size C)
ATS22●●●S6U Fan 110 V (VW3G22U●●●, ●●● = 400 for size A, 401 for size B or 402 for size C)

Soft starter thermal protection

The thermal protection is provided by the temperature sensor installed on the heatsink.

Motor thermal protection

Standard IEC 60947-4-2 defines the protection classes giving the starting capacities of the motor (warm or cold start) without thermal faults. Different protection classes are given for a COLD state (corresponding to a stabilized motor thermal state, switched off) and for a WARM state (corresponding to a stabilized motor thermal state, at nominal power).

- The soft starter is factory set to protection class 10.
- This protection class can be modified using tHP parameter in SET menu.
- The motor thermal state is stored in memory. No estimate of motor cooling is calculated while power of the control part is off.
- An overload alarm is activated if motor thermal state exceeds 110%.
- A thermal trip OLF stops the motor if motor thermal state exceeds 125%.
- If the thermal protection has not been disabled, the thermal trip can be indicated by a relay depending on output assignment.
- After the motor has stopped or the soft starter has been switched off, the thermal state is saved. At next start or switch-on, the thermal protection value is restored.
- If a special motor is used (explosion proof, submersible, etc.), the thermal protection should be provided by PTC probes.

NOTICE

RISK OF DAMAGE TO THE MOTOR

The use of external overload protection is required under the following conditions:
- Running multiple motors
- Running motors rated at less than 40% of the nominal soft starter current
- Using motor switching
- Using special motor (explosion proof, submersible, etc...)

Failure to follow these instructions can result in equipment damage.

See Motor thermal protection with PTC probes, page 25.

Cold curves

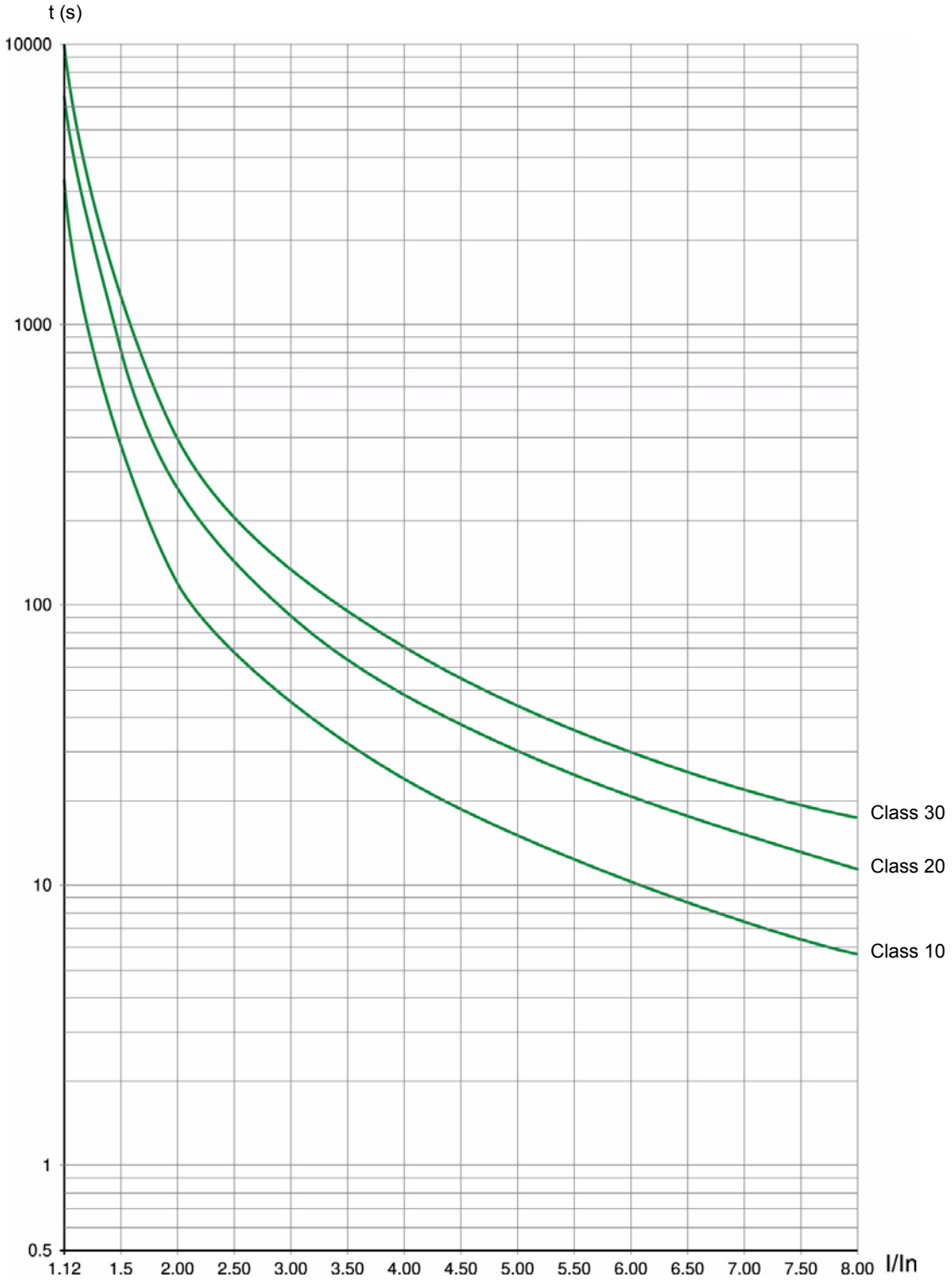

Trip time for a standard application (class 10)	Trip time for a severe application (class 20)	Trip time for a severe application (class 30)
3.5 In	3.5 In	3.5 In
32 s	63 s	95 s

Warm curves

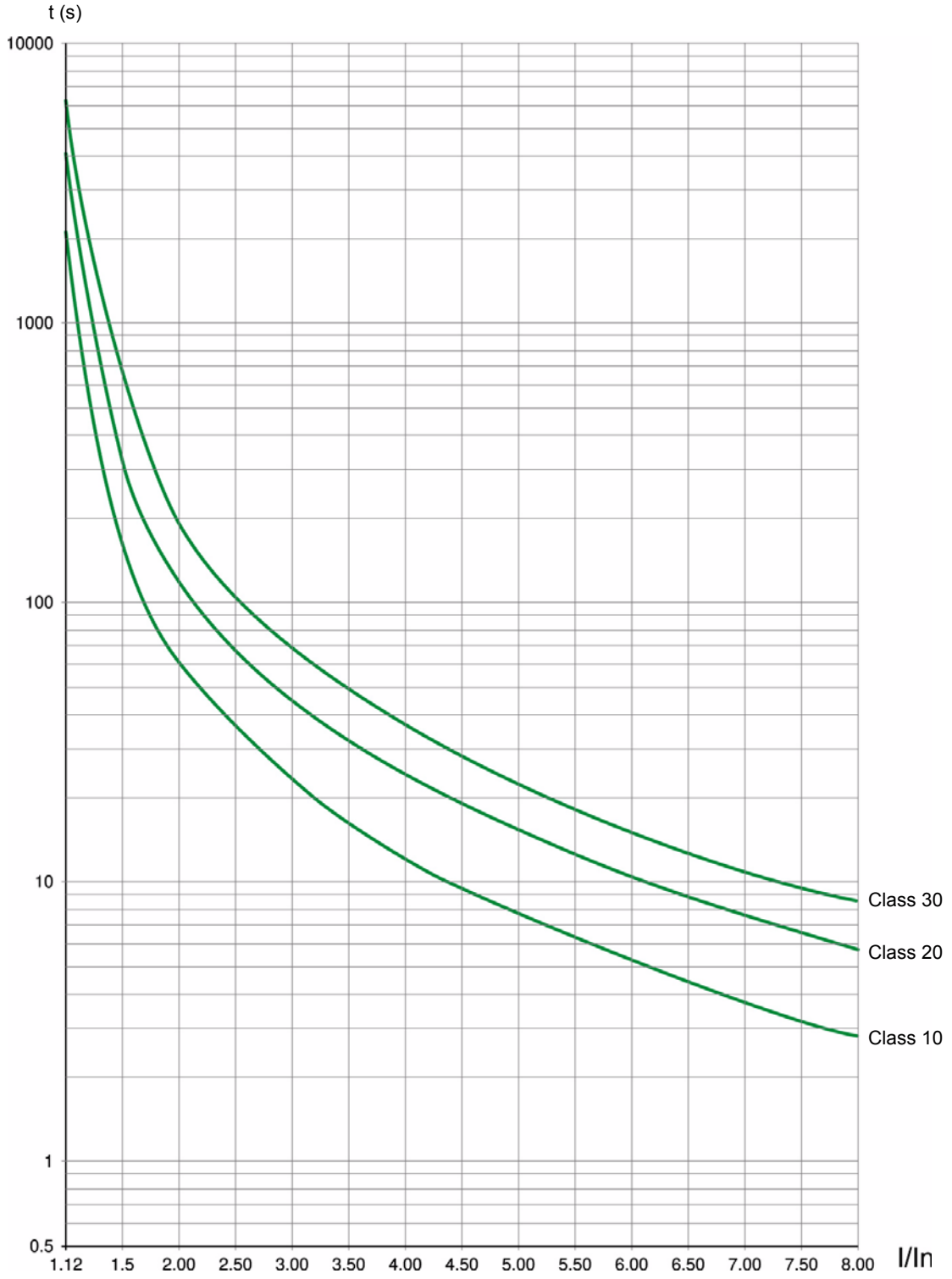

Trip time for a standard application (class 10)	Trip time for a severe application (class 20)	Trip time for a severe application (class 30)
3.5 In	3.5 In	3.5 In
16 s	32 s	48 s

Motor thermal protection with PTC probes

PTC probes integrated in the motor to measure its temperature can be connected to the control card terminals.

Note:
PTC probe protection does not deactivate the motor thermal protection provided by the soft starter calculation. Both types of protection can operate in parallel.

PTC wiring

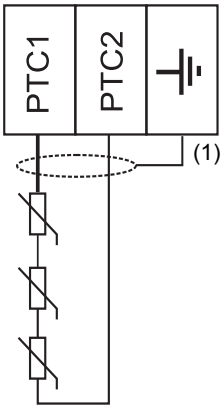

(1) Shielded cable is optional.

Characteristics

Total resistance of the probe circuit: 750 Ω at 25 °C (77 °F).
Tripping: between 2700 Ω and 3100 Ω.

Installation Precautions

⚠ ⚠ DANGER

HAZARD OF ELECTRIC SHOCK, EXPLOSION, OR ARC FLASH

- Read and understand this manual before installing or operating the Altistart 22. Installation, adjustment, repair, and maintenance must be performed by qualified personnel.
- The user is responsible for compliance with all international and national electrical code requirements with respect to grounding of all equipment.
- Many parts of this soft starter, including the printed circuit boards, operate at the line voltage. DO NOT TOUCH. Use only electrically insulated tools.
- DO NOT touch unshielded components or terminal strip screw connections with voltage present.
- Before servicing the soft starter:
  - Disconnect all power, including external control power that may be present.
  - Place a “DO NOT TURN ON” label on all power disconnects.
  - Lock all power disconnects in the open position.
- Install and close all covers before applying power or starting and stopping the soft starter.

Failure to follow these instructions will result in death or serious injury.

Good wiring practice requires the separation of control circuit wiring from all power (line and load) wiring. Power wiring to the motor must have the maximum possible separation from all other power wiring. Do not run them in the same conduit. This separation reduces the possibility of coupling electrical noise between circuits.

Follow these precautions when installing the ATS22 soft starter:

- Voltage and frequency specifications for the input line must match the soft starter configuration.
- A disconnect switch must be installed between the input line and the soft starter.

⚠ ⚠ DANGER

HAZARD OF ELECTRIC SHOCK, EXPLOSION, OR ARC FLASH

- The solid state switches of the ATS22 soft starter’s power circuit do not provide complete isolation from the AC line. Due to leakage currents through the solid-state switches, hazardous voltages can be present on the soft starter load-side power circuit whenever power is applied to the line side of the soft starter.
- Disconnect all power before servicing the soft starter or motor.

Failure to follow these instructions will result in death or serious injury.

- When using an isolation contactor, the contactor must close before or at the same time as the application of the soft starter run command. If line power is not detected at the L1, L2, and L3 terminals of the soft starter within 500 ms of this run command, a Phase Failure trip will occur.
- External overcurrent protection devices (OCPD), either fuses or a circuit breaker, must be installed on the line-side connections of the ATS22 soft starter. The maximum recommended OCPD rating, along with the associated soft starter short circuit withstand rating, is listed on the Quickstart S1A14738.

⚠ WARNING

INADEQUATE OVERCURRENT PROTECTION

- An overcurrent protective device must be installed on the line-side of the ATS22 to achieve published short-circuit withstand ratings.
- Do not exceed the maximum overcurrent protective device ratings shown on the Quickstart annex (S1A14738).
- Do not connect the soft starter to a power feeder whose short circuit capacity exceeds the soft starter short circuit withstand rating shown on the Quickstart annex (S1A14738).

Failure to follow these instructions can result in death, serious injury, or equipment damage.

- Power factor correction capacitors should not be connected to a motor controlled by an ATS22 soft starter. If power factor correction is required, the capacitors must be located on the line-side of the soft starter. A separate contactor should be used to switch the capacitors off when the motor is off, or during acceleration and deceleration. Refer to bulletin No 8638PD9603.

NOTICE

RISK OF DAMAGE TO THE SOFT STARTER

- Do not connect power factor correction capacitors to the load-side power circuit of the ATS22.
- Do not connect loads other than motors (for example transformers and resistors are forbidden).

Failure to follow these instructions can result in equipment damage.

- The ATS22 uses solid-state power switches to control motor power. When checking the condition of conductor or motor insulation, do not connect the high potential dielectric test equipment or insulation resistance tester to the soft starter since the test voltages used may damage the soft starter. Always disconnect the soft starter from the conductors or motor before performing such tests.

NOTICE

RISK OF DAMAGE TO THE SOFT STARTER

- Do not perform high potential dielectric tests on circuits while the circuits are connected to the ATS22 soft starter.
- Any circuit requiring high potential dielectric tests must be disconnected from the soft starter prior to performing the test.

Failure to follow these instructions can result in equipment damage.

- The ATS22 contains electronic circuitry to detect and signal when the solid-state switches have become inoperable.
- Since the solid-state switches may be incapable of completely blocking the motor power should the soft starter detect a fault, auxiliary isolation on the line side of the soft starter is required. Use either a circuit breaker equipped with a shunt trip coil or an electromagnetic contactor. Connect the isolation device to the detected fault relay of the soft starter so that it opens the soft starter power circuit in the event of a soft starter trip. The isolation device must be capable of interrupting motor locked rotor current.

Refer to application diagrams that display the logic controlling the isolation device via the detected fault relay.

⚠ CAUTION

MOTOR OVERHEATING HAZARD

If the solid-state switches on the ATS22 become inoperable, single-phase operation of the motor can result.
- Use an isolation device consisting of either a circuit breaker equipped with a shunt trip coil or an electromagnetic contactor to open the line-side of the soft starter.
- The isolation device must be capable of interrupting the motor locked rotor current.
- Connect the detected fault relay of the soft starter to open the isolation device in the event of a soft starter trip.

Failure to follow these instructions can result in injury or equipment damage.

⚠ WARNING

INADEQUATE SYSTEM GROUNDING- BRANCH CIRCUIT CONDUCTOR HAZARD

If system grounding is not adequate for ground fault levels, use properly coordinated external ground fault protection. Possible solutions include:
- Time delay fuses coordinated to 125% of motor FLA.
- A properly coordinated external overload relay.

Failure to follow these instructions can result in death, serious injury, or equipment damage.

System Grounding

If system grounding is not adequate to handle ground trip levels which can exceed 1300% of motor full load amps (Motor FLA), then this device may not protect the branch circuit conductors. In this case, external ground trip protection must be properly coordinated. Recommended solutions include:
- Time delay fuses coordinated to 125% of motor FLA. The fuses listed in the chapter Branch circuit protection are sized to provide proper coordination and may be used for applications that do not require start times longer than 50 seconds at 300% current limit or 20 seconds at 500% current limit.
- External overload relay. For multi-motor applications, applications in which motor does not match the soft starter size, or applications that use a full voltage bypass scheme, an external overload relay can be coordinated to protect conductors from a high-impedance ground trip.

General wiring practices

When wiring ATS22 soft starter, follow the wiring practices required by national and local electrical codes. In addition, follow these guidelines:
- Use metallic conduit for all soft starter wiring. Do not run control and power wiring in the same conduit.
- Separate metallic conduits carrying power wiring or low-level control wiring by at least 80 mm (3 in).
- Separate non-metallic conduits or cable trays used to carry power wiring from metallic conduit carrying low-level control wiring by at least 305 mm (12 in).
- Always cross power and control wiring at right angles.
- Keep the control circuits away from the power cables.

Adaptation to line input

The control circuit is completely independent of the power circuit. To apply control voltage, follow the instructions on the label located on the soft starter terminal strip. Connect single phase voltage of 110 Vac or 230 Vac supply to terminals CL1 and CL2.
The power circuit adapts automatically to the input line voltage and frequency over a range of 230 to 440 V for ATS22●●●Q soft starters, and over a range of 208 to 600 V for ATS22●●●S6 and ATS22●●●S6U soft starters.

Power Requirements

Connect the control supply (CL1-CL2), ensuring that it is off, according to the model number of the soft starter.

ATS22●●●Q and ATS22●●●S6	230 V	+10 %
	220 V	–15 %
ATS22●●●S6U	115 V	+10 %
	110 V	–15 %

Connect the power line supply (1/L1-3/L2-5/L3), ensuring that it is off, according to the model number of the soft starter.

ATS22●●●Q	230 V 440 V	+10 % –15 %
ATS22●●●S6 or ATS22●●●S6U	208 V 600 V	+10 % –15 %

Connect the motor (2/T1 - 4/T2 - 6/T3), ensuring that its coupling corresponds to the supply voltage.
Note: If the ATS22●●●Q is used inside delta connection, follow the recommendations on page 12, and the diagrams on page 30.

Bypass contactor

NOTICE

RISK OF DAMAGE TO THE EQUIPMENT

The motor phase loss detection of the 3 phases is only active at the startup of the soft starter.
It will not be detected if the loss occurred while the soft starter is already in running state

When downstream contactor is used in the sequence:
- The contactor must be closed before to apply the run command to the soft starter.
- Ensure that contactor will not be released while the soft starter is already running.

Failure to follow these instructions can result in equipment damage.

An internal bypass contactor is integrated into all ATS22 soft starters.
The bypass contactor is activated when:
I motor < 120% In
AND
U motor = 100% input line voltage

Block diagram of the power part of the Altistart 22

ATS22●●●Q range

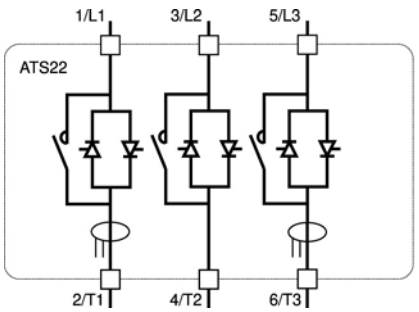

ATS22●●●S6 and ATS22●●●S6U ranges

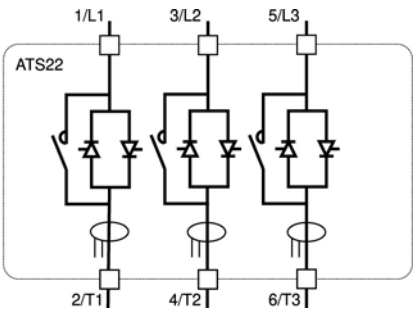

The ATS22●●●Q range (230-440 V) can be connected in the motor supply line or inside delta connection of the motor.

The Altistart 22 in line connection

The motor connection depends on the supply voltage. Two possibilities are shown below: star connection and delta connection.

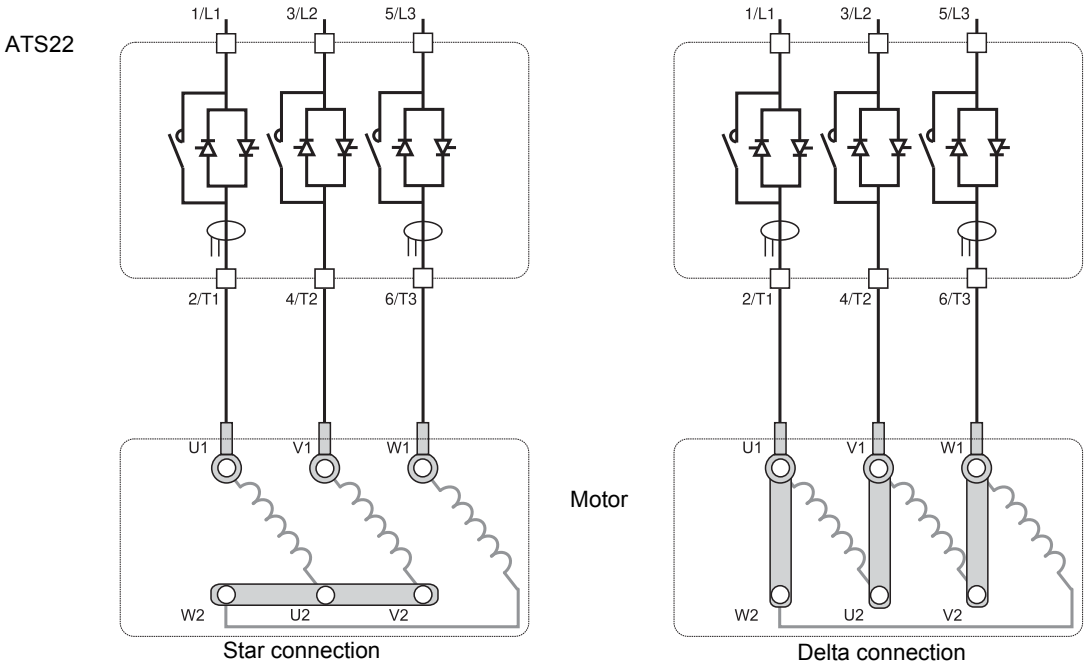

The Altistart 22 connected inside delta connection

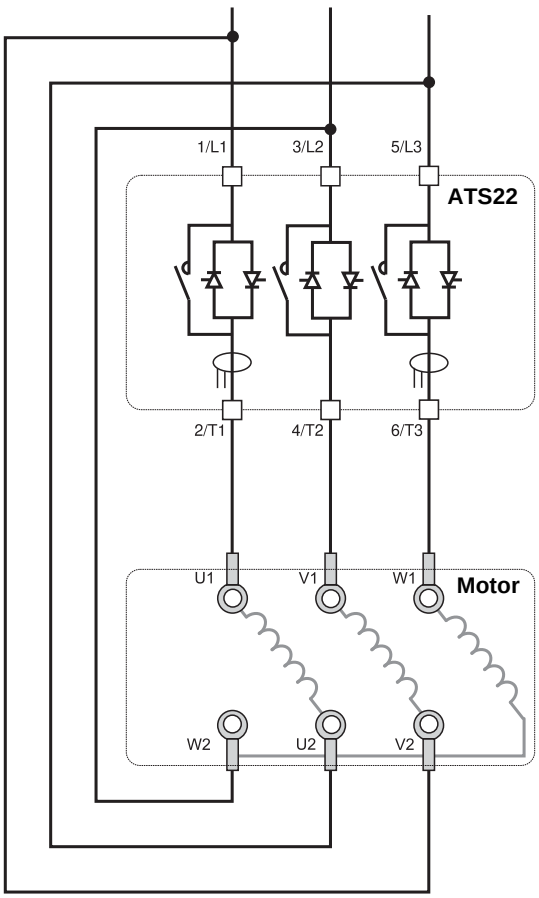

NOTICE

RISK OF DAMAGE TO THE SOFT STARTER

- Only the ATS22●●●Q range can be installed inside delta connection.
- Ensure connection exactly as shown on the example.
- Line voltage should not exceed 440 V.
- The parameter dLtA must be set to dLt.

Failure to follow these instructions can result in equipment damage.

Note: Phase sequence must be 1 - 2 - 3

The ATS22•••Q connected inside delta connection

ATS22•••Q soft starters can be inserted inside delta connection of the motor.
Only the ATS22•••Q range can be installed inside delta connection. Set the parameter dLtA to dLt.

See the tables on page 12 for more information about soft starter-motor combinations.

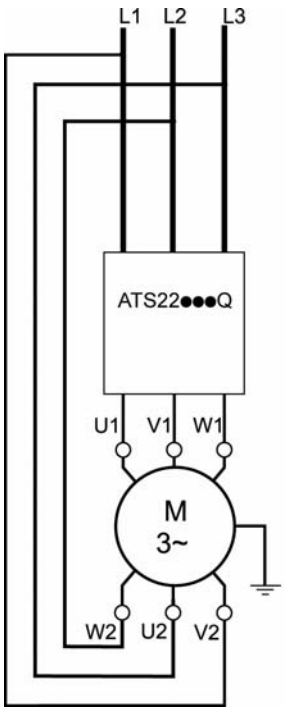

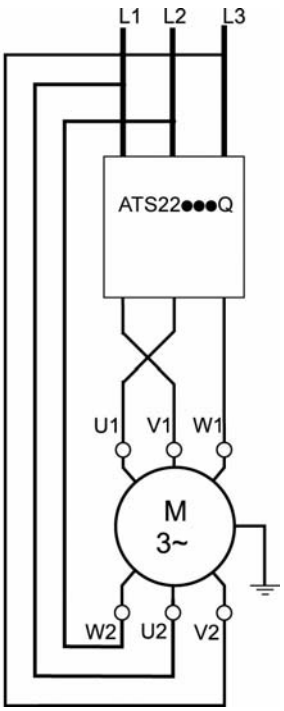

Note: To reverse the direction of the motor as shown on the figure:
- reverse the two outputs U1 and V1,
- reverse the two inputs L1 and L3.

Power

Observe the cable cross-sectional areas recommended in the standards.
The soft starter must be grounded to conform to the regulations concerning leakage currents. If the installation involves several soft starters on the same line, each soft starter must be grounded separately.
Keep the power cables separate from circuits in the installation with low-level signals (sensors, PLCs, measuring devices, video, telephone).

Cage style connectors for frame sizes A and B

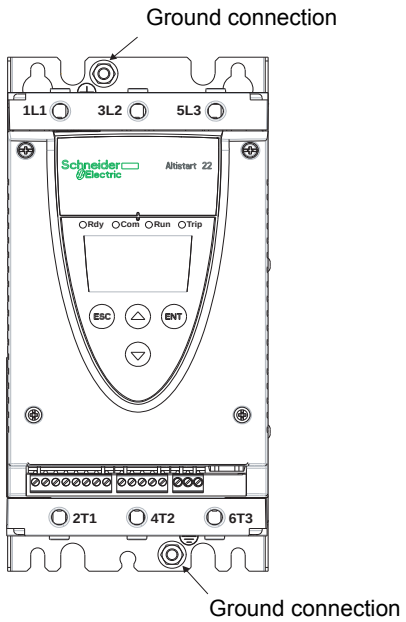

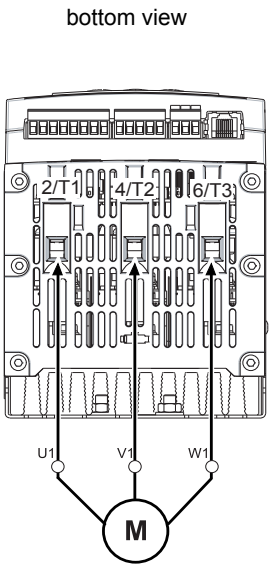

Ground connections, screw size

Frame size	Screw
A	M6
B	M6
C	M6
D	M10
E	M10

Power connections, minimum and maximum wiring capabilities, tightening torque

Frame size	ATS22	IEC cable					UL cable				
		1/L1 3/L2 5/L3 and 2/T1 4/T2 6/T3 power supply and output to motor					1/L1 3/L2 5/L3 and 2/T1 4/T2 6/T3 power supply and output to motor				
		Size		Tightening torque		Strip length	Gauge		Tightening torque		Strip length
		min.	max	min.	max		min.	max	min.	max	
		mm²	mm²	N·m	N·m	mm	AWG	AWG	lb·in	lb·in	in.
A	D17, D32, D47	2.5	16	3	3	10	12	4	26	26	0.4
B	D62, D75, D88	4 (a)	50	10	10	15	10 (a)	1/0	89	89	0.6

(a) The cable gauge affects the IP protection of the soft starter. To keep IP20 value with a connected cable on frame B, the minimum cable gauge is: 16 mm² or 4 AWG.
Allen key, supplied with size B products

⚠ DANGER

FIRE HAZARD DUE TO LACK OF TIGHTENING TORQUE

- Ensure correct connector tightening torque for power terminals.
- For size B, use the Allen key provided with the product.

Failure to follow these instructions will result in death or serious injury.

Bus bar connections for frame sizes C to E

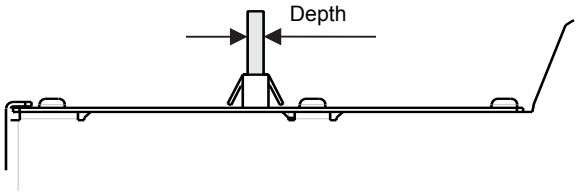

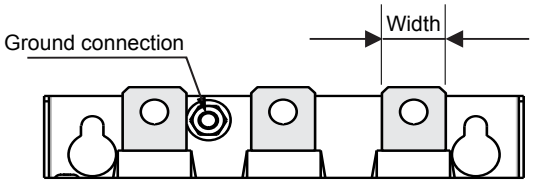

Frame Size	ATS22	1/L1 3/L2 5/L3 and 2/T1 4/T2 6/T3 power supply and output to motor							
		Bar			Cable and cover				
		Width	Depth	Bolt	Size	Gauge	Cover	Tightening torque	
		mm (in.)	mm (in.)	M	mm²	MCM	Ref	N·m	lb·in
C	**C11, C14, C17**	20 (0.79)	5 (0.2)	8 (0.31)	95	250	LA9F702	18	159
D	**C21, C25, C32, C41**	30 (1.18)	5 (0.2)	12 (0.47)	2x150	2x250	LA9F703	57	503
E	**C48, C59**	40 (1.57)	5 (0.2)	12 (0.47)	2x240	2x500	LA9F703	57	503

For more details, see Dimensions and weights paragraph page 14.

Power connections, minimum required wiring section

Frame Size	ATS22	IEC cable mm² (Cu 70 °C/158 °F) (1)	UL cable AWG (Cu 75 °C/167 °F) (1)
A	D17	2.5	10
	D32	6	8
	D47	10	6
B	D62	16	4
	D75	25	3
	D88	35	2
C	C11	35	1/0
	C14	50	2/0
	C17	70	4/0
D	C21	95	300 MCM
	C25	120	350 MCM
	C32	185	2 x 3/0
	C41	2 x 150	2 x 250 MCM
E	C48	2 x 150	2 x 350 MCM
	C59	2 x 185	2 x 500 MCM

(1) at max ambient temperature of 40 °C (104 °F)

Electrical characteristics for ATS22•••S6 and ATS22•••Q ranges (230 Vac with 24 Vdc logic input)

Terminal	Function	Characteristics
CL1	ATS22 control power supply	230 Vac +10 % 220 Vac -15 %
CL2		
R1B	Relay1 normally closed	Max switching capability: 5 A- 250 Vac or 30 Vdc on resistive load (p.f. =1) 2 A-250 Vac or 30 Vdc on inductive load (p.f.=0.4) Minimimal commutation capability: 100 mA 12 Vdc
R1C	Relay1 common	
R1A	Relay1 normally open	
R2B	Relay2 normally closed	
R2C	Relay2 common	
R2A	Relay2 normally open	
LI1	Logic input 1	3 x 24 V logic inputs with 4.3 kΩ impedance Umax = 30 V, Imax = 8 mA state 1: U>11 V - I>5 mA state 0: U<5 V - I<2 mA The 24 V power supply is limited to 42 mA (for both internal and external use). 24 Vdc accuracy: 24 V ±6 Vdc Turn on/off time delay: • Hardware: <15 ms • Software: <70-85 ms (anti bounce)
LI2	Logic input 2	
LI3	Logic input 3	
+24 Vdc	Float 24 Vdc(+) (1)	
COM	Float 24 Vdc(-)	
PTC1	PTC (+)	PTC probe connection: Total resistance of the probe circuit: 750 Ω at 25 °C (77 °F).
PTC2	PTC (-)	
⏚	Ground (shield)	
RJ45 pin 1	Not connected	RJ45 Modbus connector for • Remote terminal • SoMove software • Communication bus Modbus RJ45 1 2 3 4 5 6 7 8 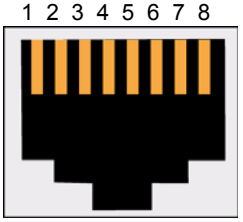
RJ45 pin 2	Not connected	
RJ45 pin 3	Common	
RJ45 pin 4	D1	
RJ45 pin 5	D0	
RJ45 pin 6	Not connected	
RJ45 pin 7	12 ±0.5 Vdc (2)	
RJ45 pin 8	Common	
RJ45 shield	Signal ground (SNG)	

(1) 24 Vdc current is limited to 42 mA ±10 %.
(2) The voltage is 11.8 V ±0.5 V when the communication is running, but not loaded externally. Maximum output current is 100 mA.

Layout of control terminals

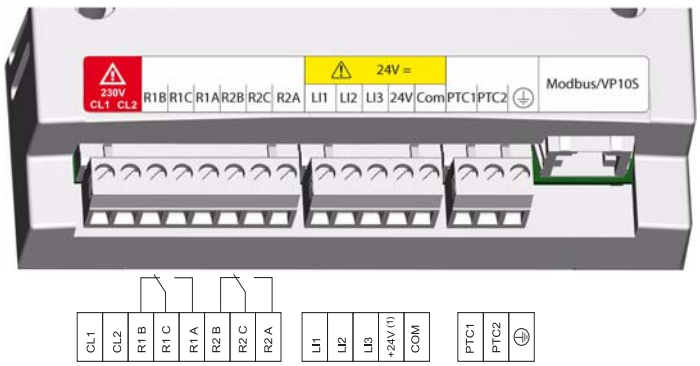

The control terminals are installed with one-way plug-in connectors.
Maximum connection capacity: 2.5 mm² (12 AWG)
Maximum tightening torque: 0.5 N·m (4.5 lb·in)

⚠ DANGER

UNINTENDED EQUIPMENT OPERATION

It is mandatory that:
- One of the relay (R1 or R2) must be set to tr IP.
- Relay R1 or R2 set to tr IP must be wired in order to command a line contactor as shown on page 38 through 41.

Failure to follow these instructions will result in death or serious injury.

Electrical characteristics for ATS22•••S6U range (110 Vac with 110 Vac logic inputs)

Terminal	Function	Characteristics
CL1	ATS22 control power supply	110 Vac +10 % -15 %
CL2		
R1B	Relay1 normally closed	Max switching capability: 5 A- 250 Vac or 30 Vdc on resistive load (p.f. =1) 2 A-250 Vac or 30 Vdc on inductive load (p.f.=0.4) Minimimal commutation capability: 100 mA 12 Vdc
R1C	Relay1 common	
R1A	Relay1 normally open	
R2B	Relay2 normally closed	
R2C	Relay2 common	
R2A	Relay2 normally open	
LI1	Logic input 1	3 x 110 V logic inputs with 20 kΩ impedance Umax = 121 Vac, Imax = 5 mA state 1: U>79 V - I>2 mA state 0: U<20 V - I<15 mA Turn on/off time delay: • Hardware: <15 ms • Software: <70-85 ms (anti bounce)
LI2	Logic input 2	
LI3	Logic input 3	
NC	Not connected	
COM	Common 110 Vac	
PTC1	PTC (+)	PTC probe connection: Total resistance of the probe circuit: 750 Ω at 25 °C (77 °F).
PTC22	PTC (-)	
⏚	Ground (shield)	
RJ45 pin 1	Not connected	RJ45 Modbus connector for • Remote terminal • So Move software • Communication bus Modbus RJ45 1 2 3 4 5 6 7 8 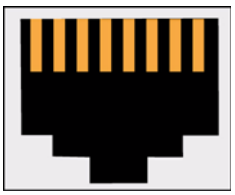
RJ45 pin 2	Not connected	
RJ45 pin 3	Common	
RJ45 pin 4	D1	
RJ45 pin 5	D0	
RJ45 pin 6	Not connected	
RJ45 pin 7	12 ±0.5 Vdc (1)	
RJ45 pin 8	Common	
RJ45 shield	Signal ground (SNG)	

(1) The voltage is 11.8 V ±0.5 V when the communication is running, but not loaded externally. Maximum output current is 100 mA.

Layout of control terminals

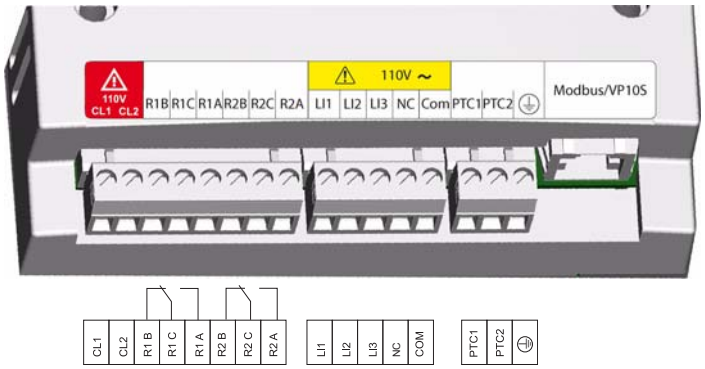

The control terminals are installed with one-way plug-in connectors.
Maximum connection capacity: 2.5 mm² (12 AWG)
Maximum tightening torque: 0.5 N·m (4.5 lb·in)

⚠ DANGER

UNINTENDED EQUIPMENT OPERATION

It is mandatory that:
- One of the relay (R1 or R2) must be set to tr IP.
- Relay R1 or R2 set to tr IP must be wired in order to command a line contactor as shown on page 38 through 41.

Failure to follow these instructions will result in death or serious injury.

Types of command

LI1 stop behavior

LI1 assignment is stop and cannot be changed by HMI or serial link.

This input is active on level (Low level (0) = stop).

RUN and START management

RUN and START can only be assigned to LI2 (not LI3).

In 2-wire control

On power-up or on manual trip reset, the motor will restart if the RUN command is present.

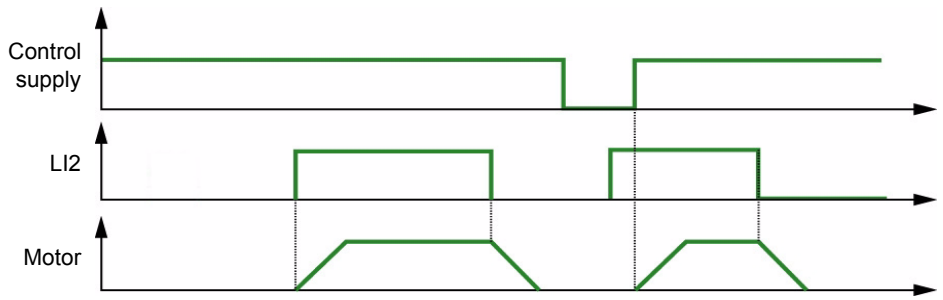

In 3-wire control

On power-up or a manual trip reset or after a stop command, or a change of assignment, the motor can only be powered once the START input has been opened (state 0) followed by a new pulse (state 1).

When switching from remote command to local command, with Run order present on the terminal control, the motor doesn't start in 3-wire control: need to remove Run order and apply it again.

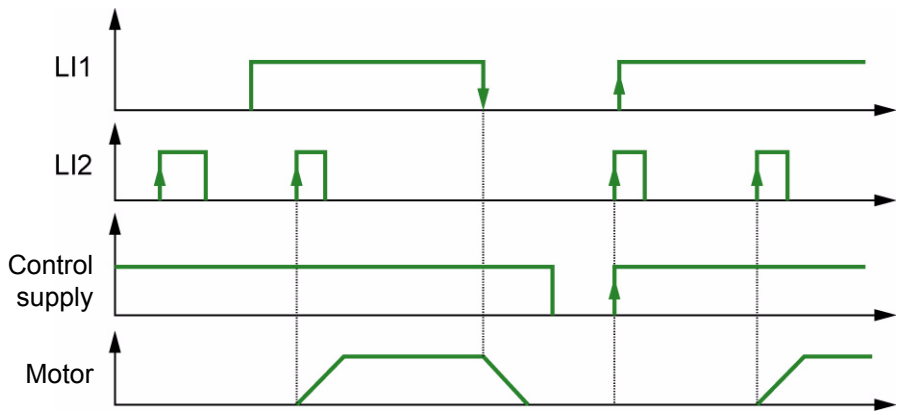

ATS22•••Q and ATS22•••S6: 230 Vac control, logic Inputs (LI) 24 Vdc, 3-wire control

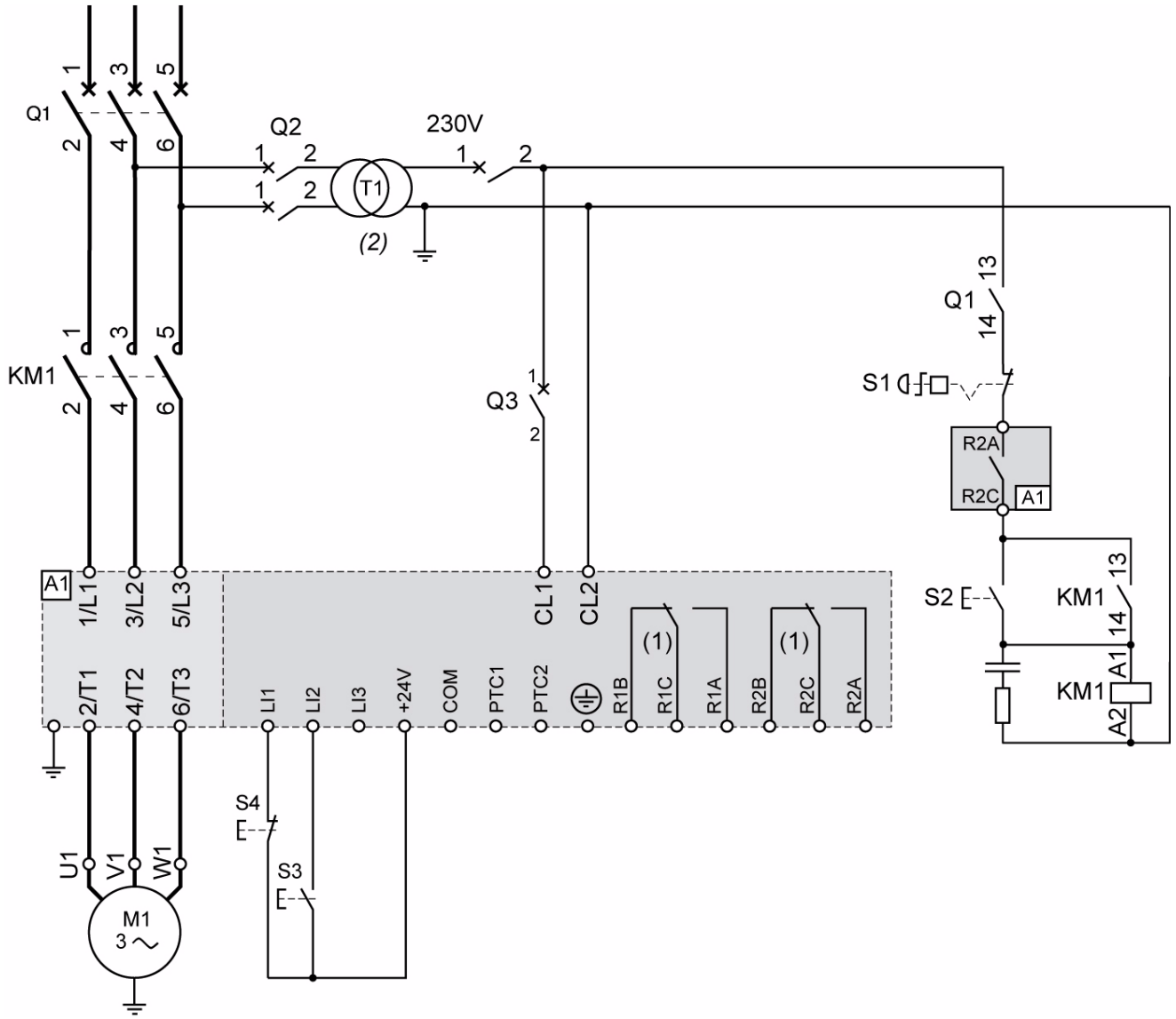

(1) Check the operating limits of the contact, for example when connecting to high rating contactors. See “Electrical characteristics” page 35.
(2) Select a voltage transformer in accordance with the mains voltage.

3-wire control setting

In the menu Advanced I/O IO, set the following parameters:

Parameter	Value	Description
LI2	Strt	Logic Input 2 is set to start
r2	trIP	Trip relay is de-energized upon trip

ATS22•••Q and ATS22•••S6: 230 Vac control, logic Inputs (LI) 24 Vdc, 2-wire control, freewheel stop

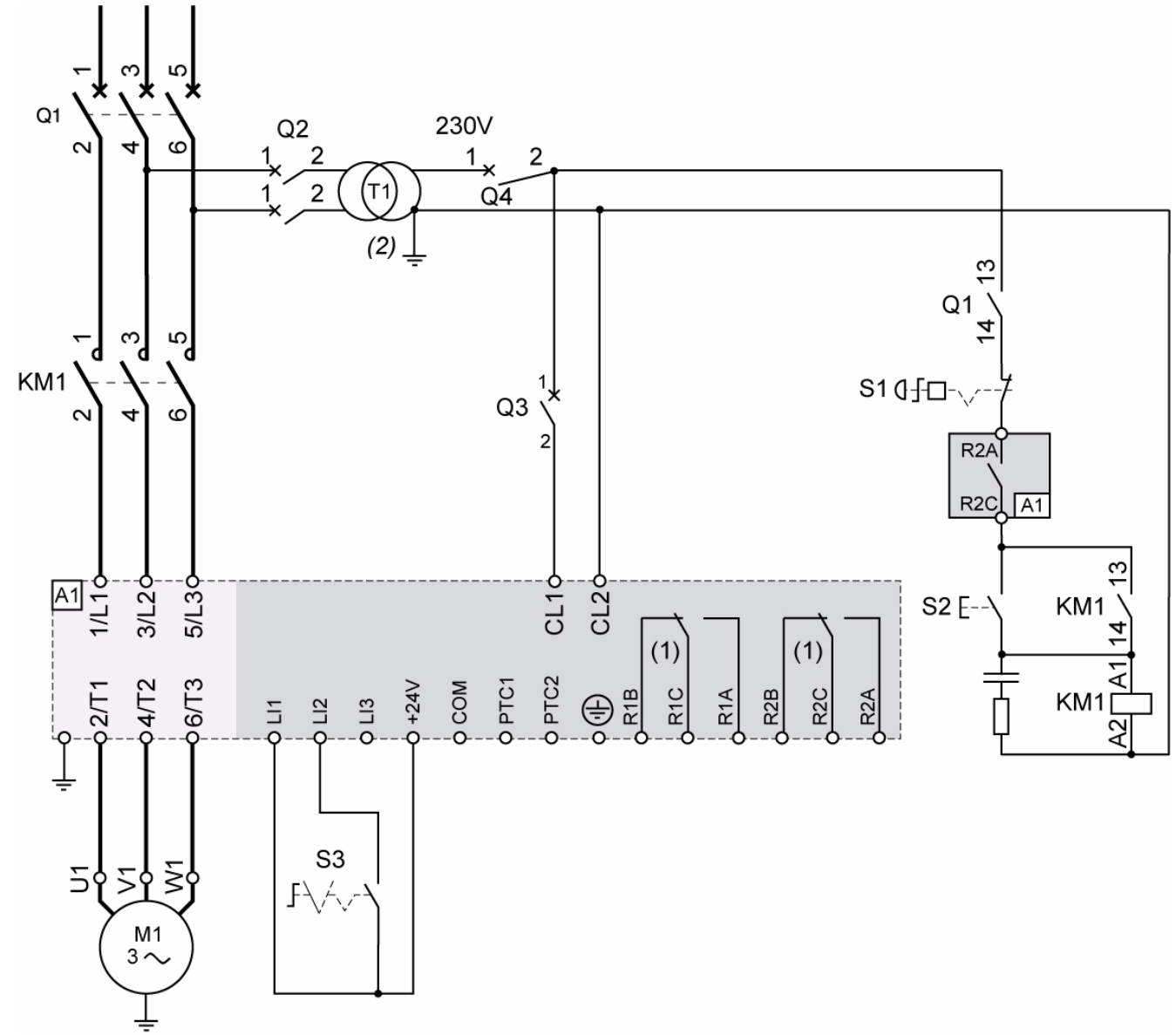

(1) Check the operating limits of the contact, for example when connecting to high rating contactors. See “Electrical characteristics” page 35.
(2) Insert a voltage transformer if the power voltage is higher than the Altistart 22 acceptable value. Characteristics: min 100 VA page 13.

2-wire control setting

In the menu Advanced I/O I O, set the following parameters:

Parameter	Value	Description
L I2	r U n	Logic Input 2 is set to Run
r 2	t r I P	Trip relay is de-energized upon trip

Note: For UL508 schematics, see page 82.

ATS22•••S6U: 110 Vac control, Logic Inputs (LI) 110 Vac, 3-wire control

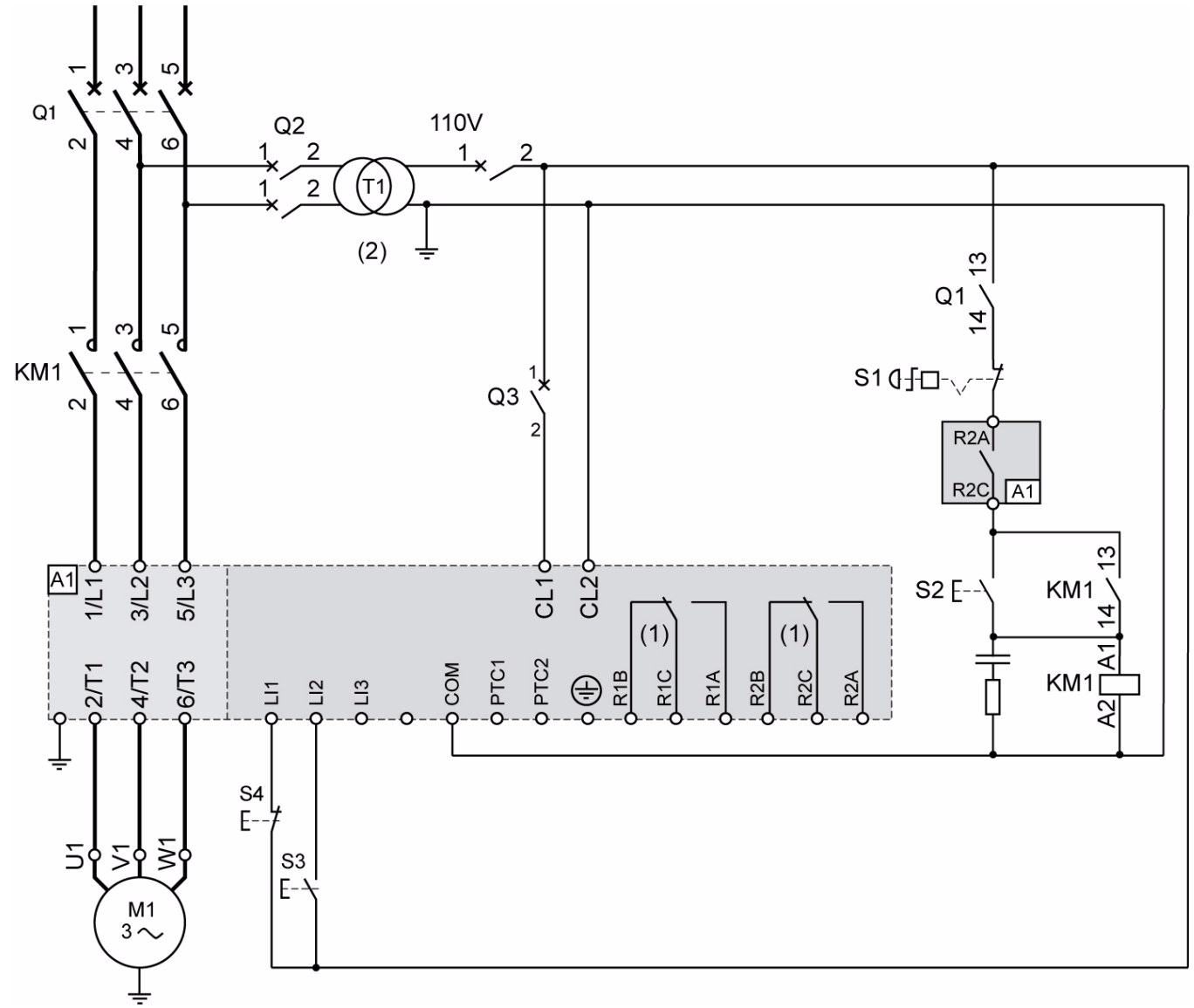

(1) Check the operating limits of the contact, for example when connecting to high rating contactors. See “Electrical characteristics” page 36.
(2) Insert a voltage transformer if the power voltage is higher than the Altistart 22 acceptable value. Characteristics: min 100 VA page 13.

3-wire control setting

In the menu Advanced I/O IO, set the following parameters:

Parameter	Value	Description
LI2	Strt	Logic Input 2 is set to start
r2	trIP	Trip relay is de-energized upon trip

ATS22•••S6U: 110 Vac control, Logic Inputs (LI) 110 Vac, 2-wire control, freewheel stop

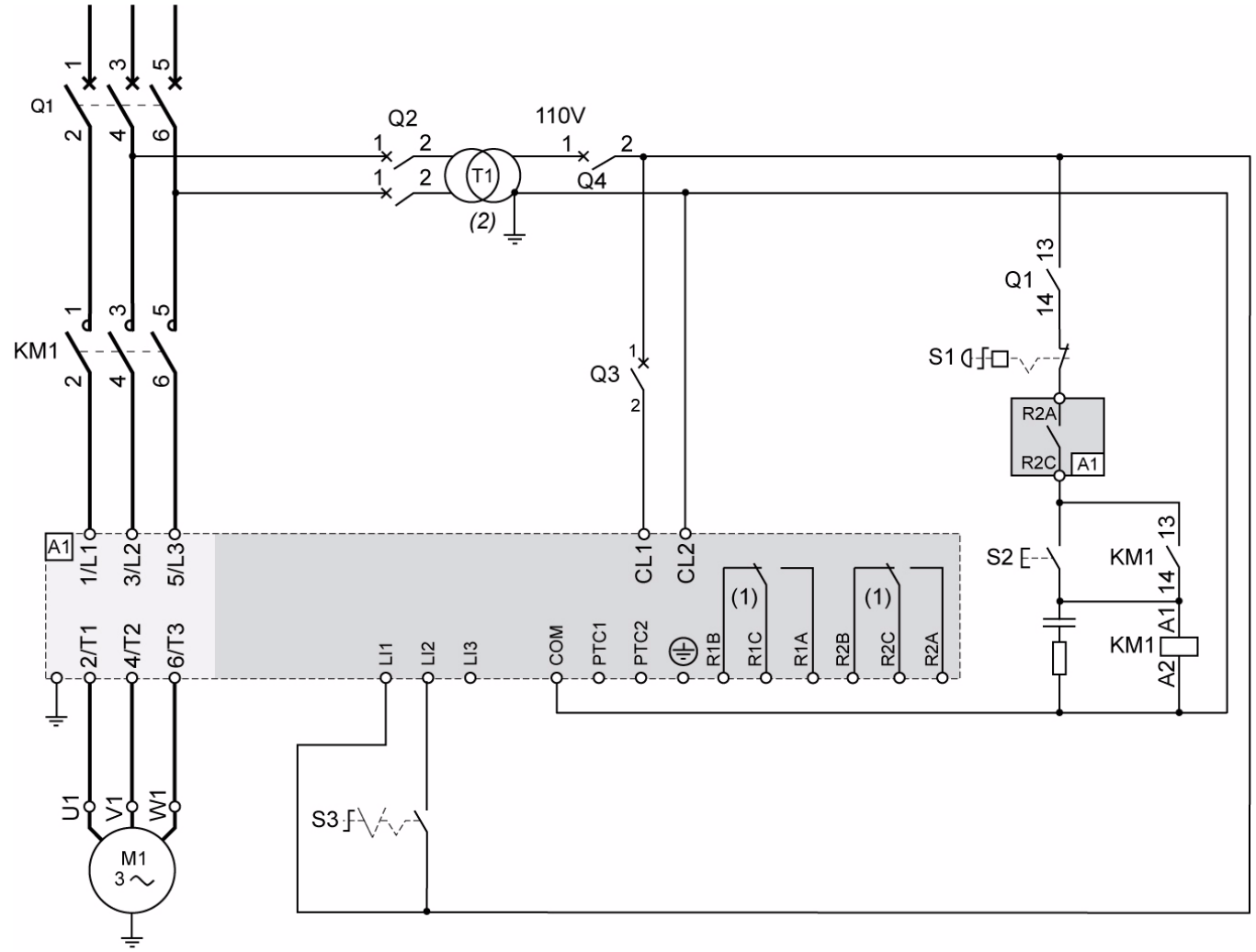

(1) Check the operating limits of the contact, for example when connecting to high rating contactors. See “Electrical characteristics” page 36.
(2) Insert a voltage transformer if the power voltage is higher than the Altistart 22 acceptable value. Characteristics: min 100 VA page 13.

2-wire control setting

In the menu Advanced I/O IO, set the following parameters:

Parameter	Value	Description
LI2	run	Logic Input 2 is set to Run
r2	trIP	Trip relay is de-energized upon trip

Note: For UL508 schematics, see page 83.

Functions of the keys and the display

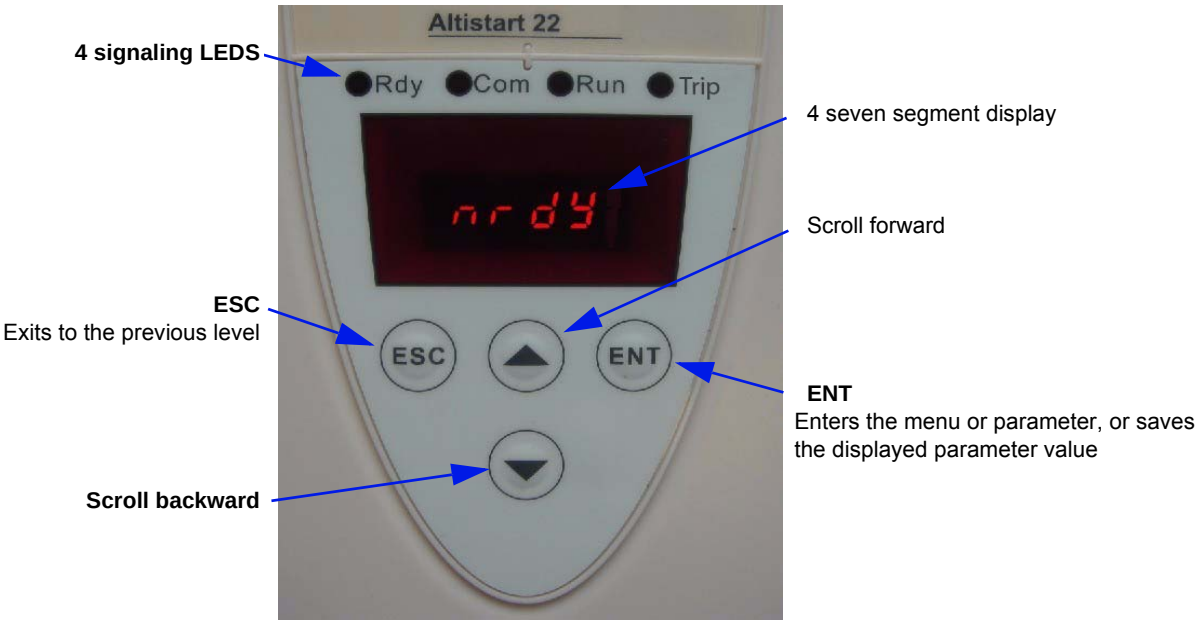

Selection process

The selection process takes you through three levels:

1-Scroll to a parameter menu and press the ENT key.

2-Scroll to a specific parameter and press the ENT key.

3-Scroll to a value and press the ENT key to save the value. A parameter value becomes valid and takes effect immediately, before you press the ENT key.

This means that, if for example you increase the current limit during the start process, the motor current will increase immediately (until 15 seconds maximum). Once you find the correct value, you can either decide to store it (press the ENT key) or return the Altistart 22 to its previous value (press the ESC key), or wait 15 seconds.

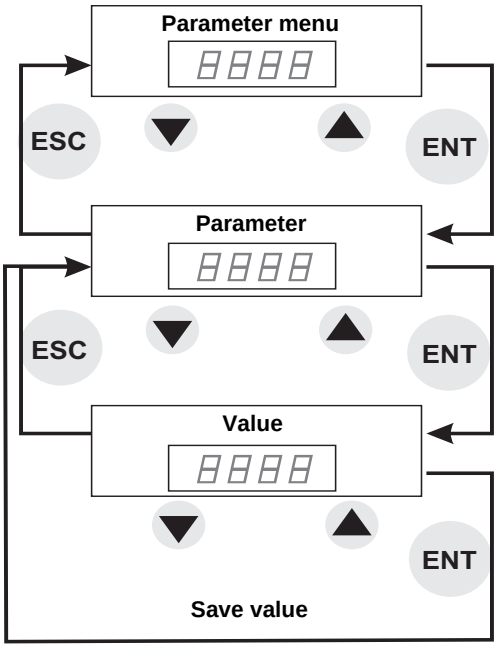

Special key combinations

Special keys combinations are used as shortcuts, see below.

Key combination	Description
ESC + ▲	Displays UtIL menu (Utility)
ENT + ▲ + ▼	Clear the trip message and reset the soft starter
ESC + ▲ + ▼	Soft starter not locked (see Cod parameter)

LED’s display

The front cover of the control board contains four LEDs above the seven segment display that display the Altistart 22 status and activity.

Name	Location	Description
Rdy	Green - front cover	ON = line and control supplied OFF = no voltage on control Flashing = control supplied but no power line nrdY or Snb reached
Com	Green - front cover	ON = Modbus status OK; Communication present. OFF = Modbus status not OK
Run	Yellow - front cover	ON = motor runs at full voltage and bypass contactor on OFF = motor stopped Flashing = ACC or DEC phase
Trip	Red - front cover	ON = trip with immediate stop OFF = no problem Flashing = alarm warning - no stop

NOTE: see LED parameter, page 78.

LEDs included inside the seven segment display		
Name	**Location**	**Description**
LCr1	Led upper left 7 segments	Current phase 1 display
LCr2	Led middle left 7 segments	Current phase 2 display
LCr3	Led down left 7 segments	Current phase 3 display

Example: LCr1 = 88 A

Note1: When the soft starter is inside delta connection, LCr1, LCr2, LCr3 values are current inside the windings. The line current = LCr x $\sqrt{3}$.

Note:2 For ATS22●●●Q, LCr2 displays " - - " because there is no current sensor on phase 2.

Remote keypad display - option

The VW3G22101 remote keypad IP54 or VW3G22102 remote keypad IP65 can be mounted on the door of the wall-mounted or floor-standing enclosure with a seal which offers IP65 protection. Any display restrictions applied to the soft starter by the remote terminal switch will still be in force once the soft starter has been disconnected and even after it has been switched off.

Note: Set the remote keypad with
- Modbus rate = 19.2 Kbps, (see tbr)
- Modbus format = 8E1, 8 bit, even parity, 1 stop bit (see For)

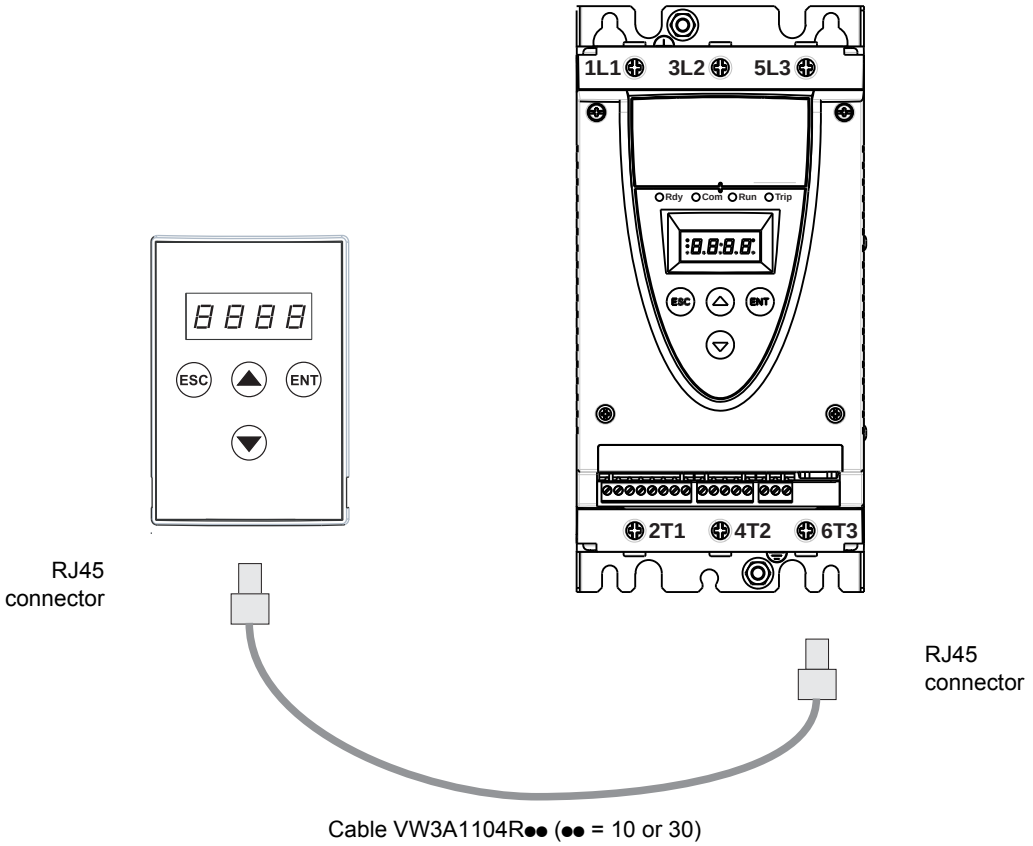

Programming and setup

Preliminary recommendations

⚠ WARNING

LOSS OF CONTROL

- The designer of any control scheme must
  - consider the potential failure modes of control paths and, for certain critical control functions,
  - provide a means to achieve a safe state during and after a path failure.

Examples of critical control functions are emergency stop and overtravel stop.

- Separate or redundant control paths must be provided for critical control functions.
- System control paths may include communication links. Consideration must be given to the implications of unanticipated transmission delays or failures of the link. (1)
- Each implementation of an ATS22 soft starter must be individually and thoroughly tested for proper operation before being placed into service.

Failure to follow these instructions can result in death, serious injury, or equipment damage.

(1) For additional information, refer to NEMA ICS 1.1 (latest edition), “Safety Guidelines for the Application, Installation, and Maintenance of Solid State Control”.

When changing the factory configuration, record your parameter settings in the Parameter Index and Modbus addresses table, starting page 77.

Menu structure

Two menu levels are provided.

"Easy start up" level - factory setting

Access to basic parameters which define the characteristics of the application to manage: acceleration ramp, boost level.

"Advanced level"

Access to dedicated parameters which define the characteristics of the motor protections, interface, communication,…
This selection will add some menus and, in the particular case of Monitoring menu, it will add some parameters.

Menu selection: "Easy start up" level or "Advanced" level

1. Scroll up or down using the forward and backward keys until you reach conF menu and press the ENT key. This enters Configuration menu.
2. Scroll up or down using the forward and backward keys until you reach LAC setting in conF menu and press the ENT key.
3. Select the desired parameter (oFF for the easy start up level or On for the advanced level) then press the ENT key. Repeat for each level of submenus and parameters until you reach the desired parameter and value.
4. Press the ENT key to save the value.

Note: A parameter value becomes valid and takes effect immediately upon changing its value. If ESC is pressed, the value previously stored in the EEPROM is restored.

Menu description

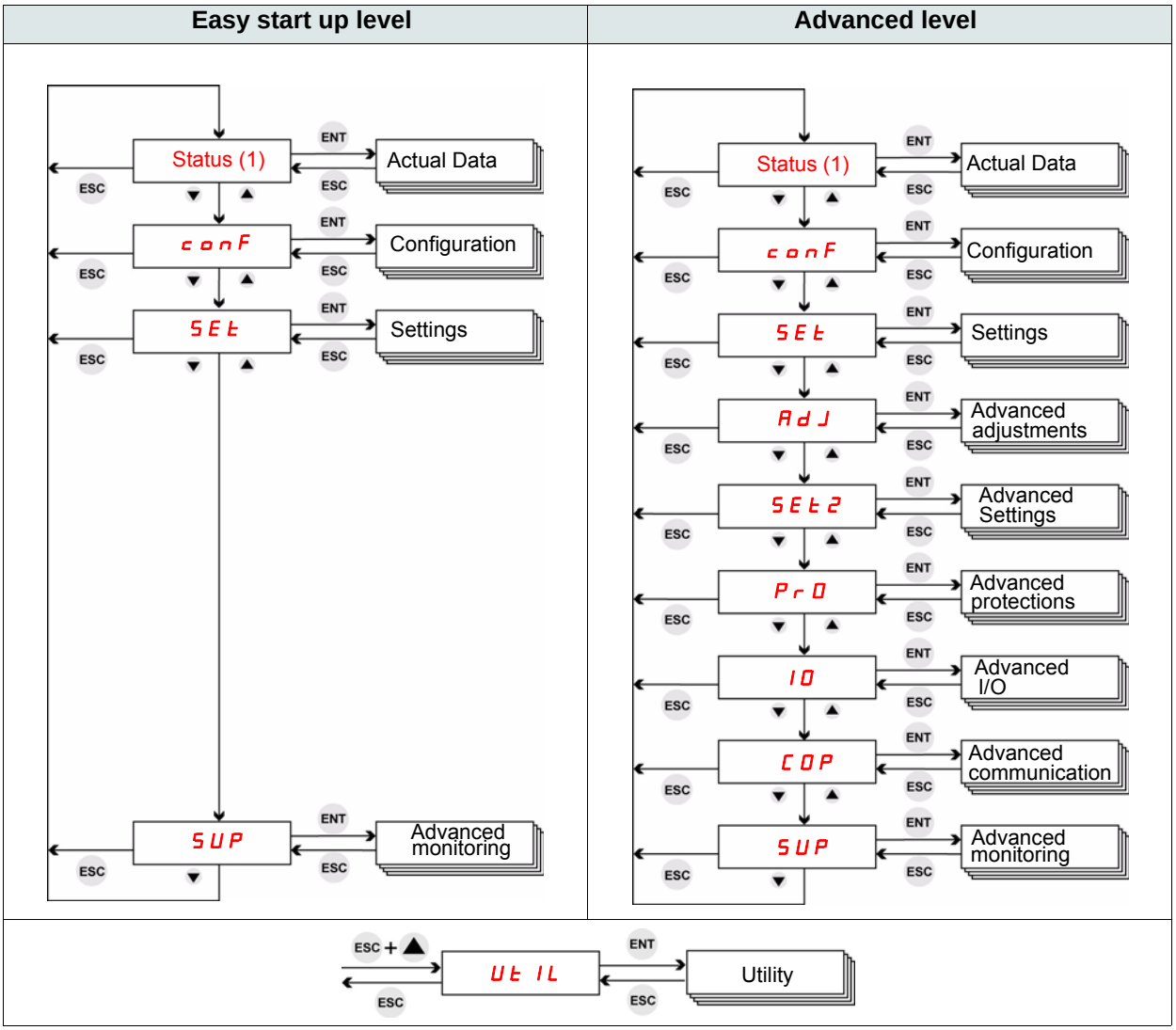

(1) Status displays the state of the soft starter: rdY nrdY rUn.
See next page for Status menu.

Status and actual data monitoring

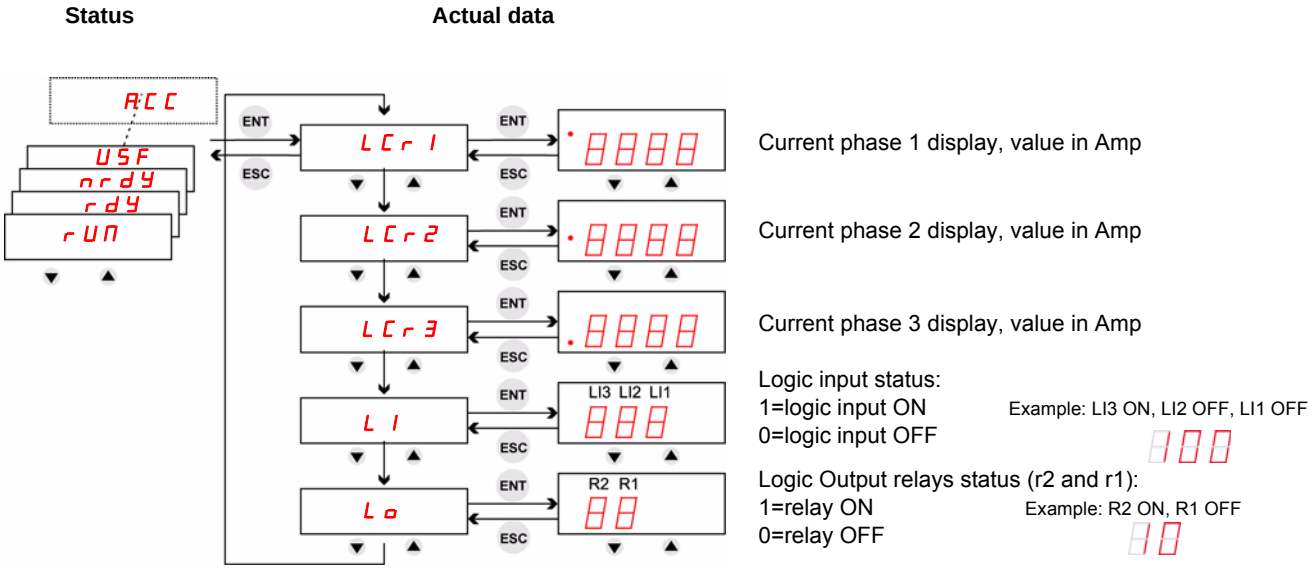

Note: When the soft starter is inside delta connection, LCr1, LCr2, LCr3 values are current inside the windings.
The line current = LCr x $\sqrt{3}$.

Status	Description
ACC	During acceleration
tbS	The soft starter has tripped in SnbF, too many starts, see Diagnostics/Troubleshooting page 76.
dEC	During deceleration
nrdY	A stop command is present, with line and control power-on LI1 = 0 and LI2 = 1 in 2-wire control LI1 = 1 and LI2 = 1 at power up in 3-wire control Or main power is switched off
rdY	Soft starter is ready to start
rUn	Steady state, the bypass contactor is closed

For the trip codes, see chapter Diagnostics / Troubleshooting page 75.

Parameters access control

- R (Read): parameter value on read ONLY.
- R/W (Read/Write): Parameter value can be changed when motor is running (except during soft start and soft stop when command is given by Modbus).
- R/W* (Read/Write): parameter value can be changed only when the soft starter is stopped.

Code	Description	R/W
	Actual data	
LCr1	Current phase 1 display (p. 47)	R
LCr2	Current phase 2 display (p. 47)	R
LCr3	Current phase 3 display (p. 47)	R
LI	Logic input status (p. 47)	R
Lo	Logic Output relays status (p. 47)	R

	conF Configuration	
IcL	Soft starter rated current (p. 50)	R
dLtA	Connection type (line or delta) (p. 50)	R/W*
UIn	Line voltage (p. 50)	R/W
In	Motor rated current (p. 50)	R/W*
Cod	Setting lock (p. 50)	R/W
LAC	Advanced mode (p. 50)	R/W

	SEt Settings	
t90	Initial voltage (p. 51)	R/W
ILt	Current limit (p. 51)	R/W
tLS	Max start time (p. 51)	R/W
ACC	Acceleration time (p. 52)	R/W
dEC	Deceleration time (p. 52)	R/W
EdC	End of deceleration (p. 52)	R/W
tHP	Motor thermal protection (p. 52)	R/W

	AdJ Advanced adjustements (1)	
Snb	Number of starts (p. 53)	R/W
SLG	Starts period (p. 53)	R/W
bSt	Boost time (p. 53)	R/W
SSC	Start-stop control (p. 54)	R/W*
SPCU	Start-stop profile control voltage (p. 54)	R/W*

	SEt2 Advanced settings (1)	
t92	2nd initial voltage (p. 55)	R/W
ILt2	2nd current limit (p. 55)	R/W
ACC2	2nd acceleration time (p. 55)	R/W
dEC2	2nd deceleration time (p. 55)	R/W
In2	2nd motor rated Current (p. 55)	R/W*

	PrO Advanced Protections (1)	
UId	Under current threshold (p. 56)	R/W
UIt	Under current time delay (p. 56)	R/W
OId	Overcurrent threshold (p. 56)	R/W
OIt	Overcurrent time delay (p. 57)	R/W
Ubd	Unbalance threshold (p. 57)	R/W
Ubt	Unbalance time delay (p. 57)	R/W
Grdd	Ground leakage current threshold (p. 57)	R/W
Grdt	Ground leakage current time delay (p. 57)	R/W

(1) Only available when Advanced mode LAC page 50 is set to On

Code	Description	R/W
	PrO Advanced Protections (continued) (1)	
PHr	Phase sequence (p. 57)	R/W*
PHL	Phase loss detection (p. 58)	R/W
USd	Under voltage threshold (p. 58)	R/W
USt	Under voltage time delay (p. 58)	R/W
OSd	Over voltage threshold (p. 59)	R/W
OSt	Over voltage time delay (p. 59)	R/W
PtC	PTC probes motor monitoring (p. 59)	R/W
ItH	Overload protection (p. 59)	R/W*

	IO Advanced IO (1)	
LI2	Logic input 2 (p. 60)	R/W*
LI3	Logic input 3 (p. 60)	R/W*
r1	Relay 1 (p. 61)	R/W*
r2	Relay 2 (p. 61)	R/W*
FAn	Fan management (p. 61)	R/W

	COP Advanced communication (1)	
Add	Modbus address (p. 62)	R/W*
tbr	Modbus baudrate (p. 62)	R/W*
For	Modbus format (p. 62)	R/W*
tto	Modbus time out (p. 62)	R/W*
CtrL	Command channel (p. 62)	R/W*

	SUP Advanced monitoring	
StPr	Last starting time (p. 63)	R
SICL	Last start maximum current (p. 63)	R
LFt	Last trip (p. 63)	R
dICL	Trip current (p. 63)	R
rnt	Total run time (p. 63)	R
Stnb	Total number of starts (p. 63)	R
dEFt	Total number of trips (p. 63)	R
dEF1	Trip history 1 (p. 63)	R
dEF2	Trip history 2 (1) (p. 63)	R
dEF3	Trip history 3 (1) (p. 63)	R
dEF4	Trip history 4 (1) (p. 63)	R
dEF5	Trip history 5 (1) (p. 63)	R
dEF6	Trip history 6 (1) (p. 63)	R
dEF7	Trip history 7 (1) (p. 63)	R
dEF8	Trip history 8 (1) (p. 63)	R
dEF9	Trip history 9 (1) (p. 63)	R

	UtIL Utility (2)	
tEst	Soft starter self test (p. 64)	R/W*
UdP	Soft starter software version (p. 64)	R
FCS	Back to factory settings (p. 64)	R/W*
rPr	Reset of trip history and counters (p. 64)	R/W*

(2) Accessible, except motor in run state, using the key shortcut

ESC + ▲

Structure of parameter tables

Parameter tables contain the descriptions of the various menus and are exploitable as well with the remote terminal and with the integrated terminal.

Example:

Code	Name/Description	R/W	Adjustment range	Factory setting
conF (2)	**Configuration menu** (1)			
dLtA (5) L InE dLt	❑ **Connection type** ☐ In line connection ☐ Inside delta connection	R/W* (6)		Line
U In (4)	❑ **Line voltage** (3) Set to the nominal voltage of the mains.	R/W	Q range: 200 to 440 V (7) S6-S6U ranges: 200 to 600 V	Q range: 400 V (8) S6-S6U ranges: 480 V

1. Menu name
2. Menu code on display
3. Description of the parameter and complementary information
4. Parameter code on display
5. Parameter value code(s) on display
6. Access control:
   - R (Read): parameter value on read ONLY
   - R/W (Read/Write): parameter value can be changed when motor is running (except during soft start and soft stop when command is given by Modbus).
   - R/W* (Read/Write): parameter value can be changed only when the soft starter is stopped.
   - Write (R/W): parameter value can be changed when the soft starter is running
7. If any, adjustment range of the parameter
8. Factory setting of the parameter, if write is possible the parameter can be modified by the user.

Code	Name/Description	R/W	Adjustment range	Factory setting
conF	**Configuration menu**			
IcL	❑ **Soft starter rated current**	R		According to the soft starter rating
	Maximum rated continuous current of the soft starter (see pages 11 and on the Quickstart annex (S1A14738)). IcL value is on the soft starter nameplate (Soft starter FLA). Read only parameter between 17 A and 590 A.			
dLtA	❑ **Connection type**	R/W*		LInE
	NOTICE **RISK OF DAMAGE TO THE SOFT STARTER** • This parameter must be set in accordance with the wiring type, see page 30. • When dLtA is set to dLt: - Only the ATS22●●●Q range can be installed inside delta connection. - Ensure connection exactly as shown page 30. - Line voltage should not exceed 440 V. **Failure to follow these instructions can result in equipment damage.**			
LInE dLt	❑ Line: in line connection ❑ Inside delta connection of the motor.			

Parameters automatically set when dLtA = dLt		
Parameter code	**Set value**	**Description**
bSt	0	Boost time, see page 53
SSC	oFF	Start-stop control, see page 54
SPCU	0	Start-stop profile control voltage, see page 54
PHr	123	Phase sequence, see page 57
EdC	Inactive	End of deceleration, see page 52

UIn	❑ **Line voltage**	R/W	Q range: 200 to 440 V S6-S6U ranges: 200 to 600 V	Q range: 400 V S6-S6U ranges: 480 V
	Set to the nominal voltage of the mains. **Note:** Improper setting may cause unnecessary tripping, because UIn is the reference for over voltage and under voltage protections.			
In	❑ **Motor rated current**	R/W*	0.4 IcL up to IcL	According to the soft starter rating (pages 11 to 22)
	• Soft starter in line connection: In = rated current of the motor. • Soft starter inside delta connection: In = rated current of the motor / √3.			
Cod	❑ **Setting lock**	R/W		nLOC
nLOC LOC	Used to enable or disable parameters modification on the displays. ❑ not locked: all R/W parameters can be modified. Also accessible with key combination ENT + ▲ + ▼ ❑ locked: all parameters are read only on local display or remote keypad display (the parameters can be still modified by serial link and SoMove software).			
LAC	❑ **Advanced mode**	R/W		oFF
oFF On	Allows you to access to the Advanced level, see page 46 for detailed description. ❑ off: Easy start up level ❑ on: Advanced level **Note:** It also allows to display a longer trip history list: LAC set to oFF: Total number of trips dEFt and Trip history 1 dEF1, page 63. LAC set to On: Total number of trips dEFt and Trip history 1 dEF1 to Trip history 9 dEF9, page 63.			

*: Write only when the soft starter is stopped

Code	Name/Description		R/W	Adjustment range	Factory setting
SEt	**Settings menu**				
t90	❑ **Initial voltage**		R/W	10..50 % of full voltage, by increment of 5	30 %

Sets the motor's initial starting voltage.
Initial voltage should be set in order to produce motor rotation as soon as the voltage is applied to the motor.
If set too low, the motor will rotate later after the "Run" signal.

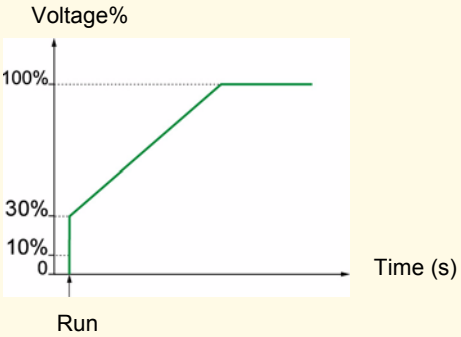

t90 is set by increment of 5 with the HMI.
And t90 is set by increment of 1 only with the communication network.

ILt	❑ **Current limit**		R/W	200..700 % of In with max 350 % of IcL	350 %

Set the motor current limit applied during the soft start.
With the maximum load, the ILt should be set to a high enough value to allow motor start.
Current limit is not operating during Run and Soft stop.

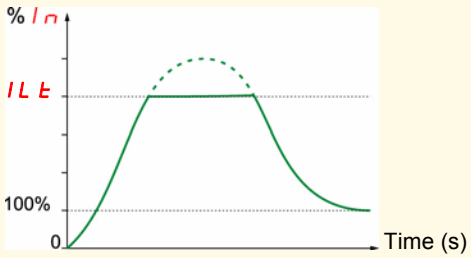

If the application requires more 350% IcL, the soft starter must be oversized.

NOTICE

RISK OF DAMAGE TO THE SOFT STARTER

By communication network, do not set ILt above 350 % of IcL.

Failure to follow these instructions can result in equipment damage.

tLS	❑ **Max start time**		R/W	1..250 s	15 s

Set the maximum start time. The time calculation is between the "start" order and "Run" Led light on (motor runs at full voltage and bypass contactor on).
Used to prevent a longer start time than expected.
Note: Check that ACC is lower than tLS.

Example: jammed motor
If the starting time exceeds the value of tLS, the Soft starter displays StF "Too Long StartTime" trip, page 76.

Code	Name/Description	R/W	Adjustment range	Factory setting
SEt	**Settings menu** (continued)			
ACC	❑ **Acceleration time**	R/W	1..60 s	10 s

Determines motor's voltage ramp up time, if SSC is set to OFF.
Determines motor's torque ramp up time, if SSC is set to ON.

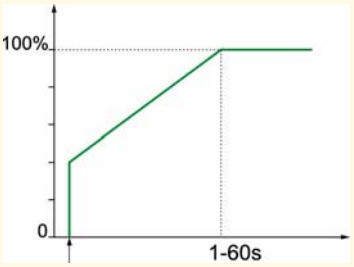

Run command

dEC	❑ **Deceleration time**	R/W	FrEE, 1...60 s	Free

Determines motor's voltage ramp down time, if SSC is set to OFF.
Determines motor's torque ramp down time, if SSC is set to ON.

I to 60 ☐ Deceleration time
FrEE ☐ Freewheel deceleration

%

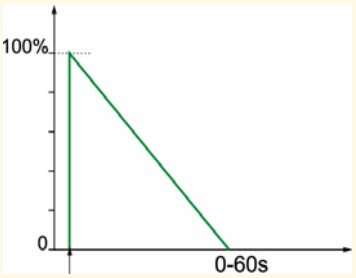

Time(s)

Run

EdC	❑ **End of deceleration**	R/W	0..10	0

Threshold for changing to freewheel stop mode at the end of deceleration.
Soft deceleration will end when the estimated torque falls below the EdC value.
Note: Edc is inactive when dLtA = dLt. In this case, EdC value is not used and is not relevant.

Motor voltage

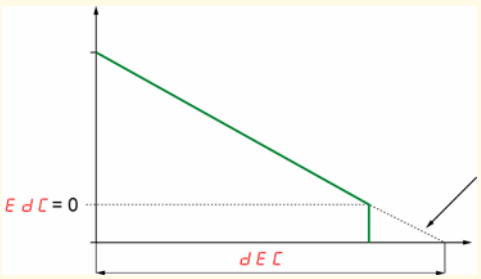

Freewheel

Time(s)

Motor voltage

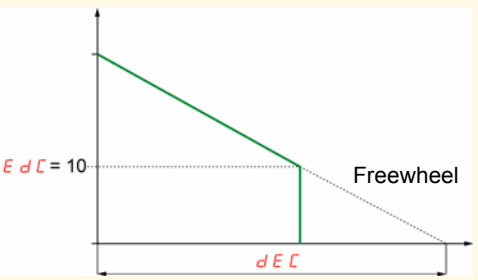

Freewheel

tHP	❑ **Motor thermal protection**	R/W		10

To select the class of motor thermal protection, see explanations and curves page 22.

10 ☐ IEC class 10
20 ☐ IEC class 20
30 ☐ IEC class 30 (heavy duty)

Note: To activate the Motor thermal protection, set ItH to ErUn or On, page 59

Code	Name/Description	R/W	Adjustment range	Factory setting
AdJ (1)	**Advanced adjustments menu**			
Snb	❑ **Number of starts**	R/W	oFF, 1..10	oFF
	Limiting the number of soft starts and soft stops during an adjustable period of time. This period is set with SLG. When the number of soft starts and soft stops is above the Snb value, during SLG period, the trip message is SnbF or tbS. **Example 1:** Snb = 6, SLG = 30 min and dEC = Free 6 starts are allowed in 30 min period. If you do 7 starts, you will have SnbF trip message. **Example 2:** Snb = 6, SLG = 30 min and dEC = 10 3 starts and 3 stops are allowed in 30 min period. If you do 4 starts, you will have SnbF trip message.			
SLG	❑ **Starts period**	R/W	1..60 min	30 min
	See Snb above.			
bSt	❑ **Boost time**	R/W	0.0 .. 1.0 by increment of 0.1	0 (no pulse)
	Intended to start high friction loads that require high starting torque for a short time. A pulse of 80% UIn, without current limit, is initiated to break the load free. Pulse duration is adjustable, 0.1 – 1sec. After this pulse, the voltage is ramped down to the initial voltage setting, before ramping up again to full voltage according to start parameters settings. Voltage % 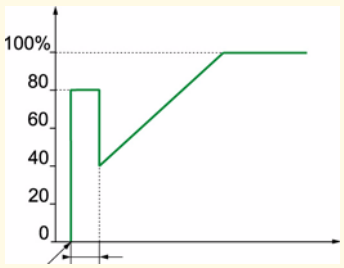 Run 0.1 to 1 s **Note:** bSt is inactive (=0) when dLtA = dLt. In this case, bSt value is not used and is not relevant. 0.1 s on keypad becomes 1 with Modbus (1/10th s value with Modbus). Time (s)			

(1) Only available when Advanced mode LAC page 50 is set to On.
*: Write only when the soft starter is stopped

Code	Name/Description	R/W	Adjustment range	Factory setting
AdJ (1)	**Advanced adjustments menu** (continued)			
SSC	❑ **Start-stop control**	R/W*		On
On	☐ On : Acceleration ACC and deceleration dEC are controlled by torque. When SSC=On the soft starter will set automatically the Start-stop profile control voltage, SPCU DEACTIVATED. This configuration is suitable for most of the applications, and especially pumps. However, other controls are available with SPCU (activated when SSC=oFF)			
oFF	☐ Off			

Parameters affected when SSC = oFF		
Parameter code	**Status**	**Description**
ACC	Controlled by voltage variation	Acceleration time, see page 52.
dEC		Deceleration time, see page 52.
SPCU	Active	Start-stop profile control voltage

Note: SSC is set to oFF when dLtA=dLt. In this case, SSC value is not used and is not relevant.

SPCU	❑ **Start-stop profile control voltage**	R/W*		0

Acceleration and deceleration are controlled by voltage variation

Note: SPCU is forced to "profile 0" when dLtA = dLt. SPCU is inactive When SSC = On.
In these cases, SPCU values are not used and are not relevant.

- 0 ☐ Start-stop profile 0: open loop with simple voltage ramp-up.
- 1 ☐ Start-stop profile 1
- 2 ☐ Start-stop profile 2
- 3 ☐ Start-stop profile 3

Profiles 1, 2 and 3, are controlling voltage ramp-up with reduction of the over-torque at the end of starting.
Advice: evaluate behavior on the application from profile 0 up to profile 3. If the application is instable, come back to the previous profile.

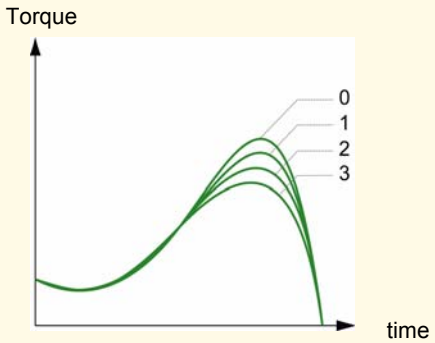

(1) Only available when Advanced mode LAC page 50 is set to On.
*: Write only when the soft starter is stopped

Code	Name/Description	R/W	Adjustment range	Factory setting
SEt2 (1)	**Advanced settings menu**			
	SEt2 allows you to have a 2nd set for the 5 parameters below. These parameters have the same definition as SEt. They can be validated with 2 possibilities: • Remotely by communication. • With logic input.			
t92	❑ **2nd initial voltage** Same as Initial voltage t90 page 51.	R/W	10..50 % of full voltage U In, by increment of 5	30 %
ILt2	❑ **2nd current limit** Same as Current limit ILt page 51.	R/W	200..700 of In2 with max 350 % IcL	350 %
ACC2	❑ **2nd acceleration time** Same as acceleration time ACC page 52.	R/W	1..60 s	10 s
dEC2	❑ **2nd deceleration time** Same as deceleration time dEC page 52.	R/W	FrEE, 1..60 s	FrEE
In2	❑ **2nd motor rated Current** Same as motor rated current In page 50.	R/W*	0.4 IcL up to IcL	According to the soft starter rating (see pages 11 to 22)

(1) Only available when Advanced mode LAC page 50 is set to On.

Code	Name/Description	R/W	Adjustment range	Factory setting
PrO (1)	**Advanced protections menu**			
UId	❑ **Under current threshold**	R/W	Off, 20..90 (% In)	oFF
	Trips the soft starter when motor current drops below set level for a time longer than under current time delay (UIt). Active in running state. **Note**: Trip message is UCF.			
UIt	❑ **Under current time delay**	R/W	1..40 s by increment of 1 s	10 s
	Adjusts the time delay linked with the parameter under current threshold UId.			
OId	❑ **Overcurrent threshold**	R/W	100..300 (% In) by increment of 5	200 %
	Trips the soft starter when motor current rises above a set level for a time longer than overcurrent time delay (OIt). Active in running state. **Note:** Trip message is OCF.			

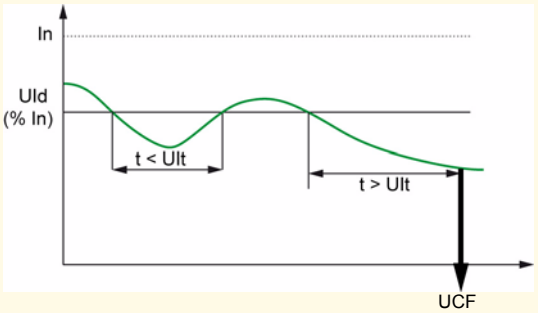

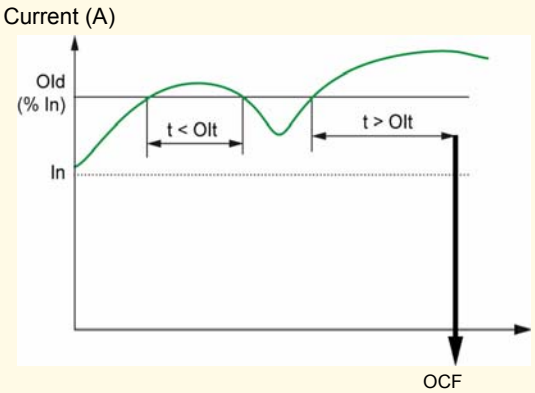

(1) Only available when Advanced mode LAC page 50 is set to On.

Code	Name/Description	R/W	Adjustment range	Factory setting
PrO (1)	**Advanced protections menu** (continued)			
OIt	❑ **Overcurrent time delay** Adjusts the time delay linked with the parameter OId.	R/W	0.0 .. 5.0 by increment of 0.1	0.5 s
Ubd	❑ **Unbalance threshold** Trips the soft starter in case of motor current unbalance, between 2 or 3 phases. This is depending also to the soft starter range. This is linked with the unbalance time delay Ubt. Adjusts the motor current unbalance. Combined with unbalance delay Ubt. **Note:** Trip message is PHbd.	R/W	Off,10..100 (% of In)	25
Ubt	❑ **Unbalance time delay** Adjusts the time of unbalance threshold Ubd.	R/W	1..60 s by increment of 1	10 s
Grdd	❑ **Ground leakage current threshold** Only in the ATS22●●●S6 range and ATS22●●●S6U ranges Automatically set to oFF on ATS22●●●Q range Combined with Ground leakage current time delay (Grdt). **Note:** Trip message is GrdF.	R/W	Off, 10..100 % of In	25 for S6 and S6U oFF for Q
Grdt	❑ **Ground leakage current time delay** Adjusts time delay of ground leakage current threshold Grdd.	R/W	1..60 s	5 s
PHr	❑ **Phase sequence**	R/W*		oFF
321 123 oFF	❑ 3 2 1: reverse (L3 - L2 - L1) ❑ 1 2 3: Forward (L1 - L2 - L3) ❑ Off: not monitoring If the line phases are not in the order configured, the soft starter trips and displays PIF. **Note:** When dLtA is set to dLt (the soft starter is connected Inside delta connection), PHr is forced to 123. In this case, PHr value is not used and is not relevant.			

(1) Only available when Advanced mode LAC page 50 is set to On.
*: Write only when the soft starter is stopped

Code	Name/Description	R/W	Adjustment range	Factory setting
PrO (1)	**Advanced protections menu** (continued)			
PHL	❑ **Phase loss detection**	R/W*		On

Manage the input (or line) phase loss controls.

- ☐ on
- ☐ off

Note: Trip message is PHF.

NOTICE

RISK OF DAMAGE TO THE SOFT STARTER

The motor phase loss detection of the 3 phases is only active at the startup of the soft starter.
It will not be detected if the loss occurred while the soft starter is already in running state

When downstream contactor is used in the sequence:

- The contactor must be closed before to apply the run command to the soft starter.
- Ensure that contactor will not be released while the soft starter is already running.

Failure to follow these instructions can result in equipment damage.

USd	❑ **Under voltage threshold**	R/W	50..90 (% of ULn)	70 %

Trips the soft starter when the voltage drops below the set level for a time longer than under voltage time delay (USt).

Line voltage (V)

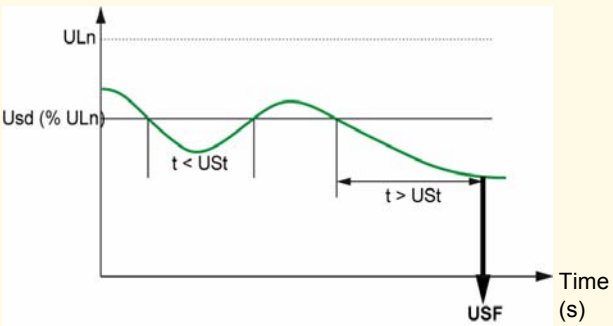

Note:
Becomes operational only after start signal. When voltage drops to zero (voltage outage), the soft starter will trip immediately, overriding the delay. Trip message is USF.

USt	❑ **Under voltage time delay**	R/W	1..10	5 s

Adjusts the time of under voltage threshold USd.

(1) Only available when Advanced mode LAC page 50 is set to On.
(2) Only available by Modbus.

Code	Name/Description	R/W	Adjustment range	Factory setting
PrO (1)	**Advanced protections menu** (continued)			
OSd	❑ **Over voltage threshold**	R/W*	110..125 % of U In	120 %

Trips the soft starter when mains voltage increases above the set level for a time longer than over voltage time delay (OSt).

Line voltage (V)

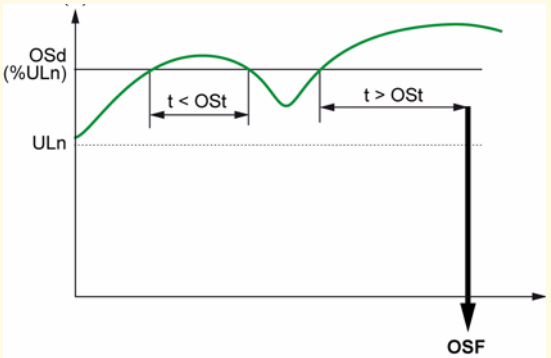

Time (s)

Note: Trip message is OSF. The trip appears only after a Run command.

OSt	❑ **Over voltage time delay**	R/W	1..10	2 s

Trips the soft starter when mains voltage increases above the set level for a time longer than overvolt delay.
Note: Trip message is OSF.

PtC	❑ **PTC probes motor monitoring**	R/W		oFF

The PTC probes on the motor must be connected to the correct analog input (see page 25).
This protection is independent of the Motor thermal protection tHP.
Both types of protection can be used simultaneously.

- oFF ☐ off (No PTC probes are not activated)
- On ☐ on (PTC probes activated. Wire the probes)

Note: Trip message is OtF.

ItH	❑ **Overload protection**	R/W*		On

ItH determines if and when the overload protection is active

- oFF ☐ off: the overload protection is disabled
- ErUn ☐ Erun: the overload protection is enable only during the steady state (rUn)
- On ☐ On: the overload protection is always enable.

Note: Trip message is OLF. ItH set to oFF resets the thermal state of the motor when the soft starter is stopped.

CAUTION

RISK OF DAMAGE TO THE SOFT STARTER AND THE MOTOR

- When ItH = oFF, it is recommended to use PtC probes to protect the motor against overheating.
- When ItH = ErUn, it is recommended to set tLS to the maximum start time of the installation, to protect the installation in case of motor stalling.

Failure to follow these instructions can result in equipment damage.

(1) Only available when Advanced mode LAC page 50 is set to On.
*: Write only when the soft starter is stopped

Code	Name/Description	R/W	Adjustment range	Factory setting
IO (1)	**Advanced IO menu**			
LI2	❑ **Logic input 2**	R/W*		rUn

- ☐ start: for a 3-wire control
- ☐ run: for a 2-wire control
- ☐ 2nd: 2nd set of parameters
- ☐ EtF: external detected fault
- ☐ rSt: remote reset
- ☐ FAn: fan control
- ☐ FI: trip inhibition: assigned after a continuous press of ENTER key during 2 s.
- ☐ LIL: Forced local command (by control terminals)

Note: the modification will be taken into account only at the next control power-on.

⚠ DANGER

LOSS OF PERSONNEL AND EQUIPMENT PROTECTION

- Enabling Logic input to FI will disable the soft starter protection features, except PIF, PHF, SCF, CFF, trAP.
- It should not be enabled for typical applications of this equipment.
- It should be enabled only in extraordinary situations where a thorough risk analysis demonstrates that the presence of soft starter protection poses a greater risk than personnel injury or equipment damage.

Failure to follow these instructions will result in death or serious injury.

LI3	❑ **Logic input 3**	R/W*		rSt

- ☐ 2nd: 2nd set of parameters
- ☐ EtF: external detected fault
- ☐ rSt: remote reset
- ☐ FAn: fan control
- ☐ FI: trip inhibition: assigned after a continuous press of ENTER key during 2 s.
- ☐ LIL: Forced local command (by control terminals)

Note: the modification will be taken into account only at the next control power-on.

⚠ DANGER

LOSS OF PERSONNEL AND EQUIPMENT PROTECTION

- Enabling Logic input to FI will disable the soft starter protection features, except PIF, PHF, SCF, CFF, trAP.
- It should not be enabled for typical applications of this equipment.
- It should be enabled only in extraordinary situations where a thorough risk analysis demonstrates that the presence of soft starter protection poses a greater risk than personnel injury or equipment damage.

Failure to follow these instructions will result in death or serious injury.

(1) Only available when Advanced mode LAC page 50 is set to On.
*: Write only when the soft starter is stopped

Code	Name/Description	R/W	Adjustment range	Factory setting
IO (1)	**Advanced IO menu** (continued)			
r1	❑ **Relay 1**	R/W*		nStP

⚠ DANGER

UNINTENDED EQUIPMENT OPERATION

It is mandatory that:
- One of the relay (R1 or R2) must be set to trIP.
- Relay R1 or R2 set to trip must be wired in order to command a line contactor as shown on page 38 through 41.

Failure to follow these instructions will result in death or serious injury.

StPd	☐ stopped - Relay is energized at stop
nStP	☐ not stopped - Relay is not energized at stop and is energized at all other times
Strt	☐ starting - Relay is energized during the start process until the bypass contactor is closed
rUn	☐ running - Relay is energized when the bypass contactor is closed
rdY	☐ ready - Relay is energized when the soft starter is ready to be started (mains is connected, no trip and the maximum number of starts (Snb) is not reached)
trIP	☐ trip - Relay is de-energized in case of trip
ALr	☐ alarm - Relay is de-energized upon alarm, Overload alarm: thermal state of overload protection is above 110%.

Note: An alarm indicates the presence of non critical event.

r2	❑ **Relay 2**	R/W*		trIP

Same as r1.

FAn	❑ **Fan management**	R/W		AUto

AUto	☐ auto: the soft starter manages automatically the fan.
On	☐ on: always on
oFF	☐ off: always oFF
HAnd	☐ Hand: manual Fan is controlled by a Logic input (LI2 or LI3)

CAUTION

RISK OF DAMAGE TO THE SOFT STARTER

When FAn is set to oFF or HAnd, ensure that the soft starter mets the mounting recommendations described page 18.

Failure to follow these instructions can result in equipment damage.

(1) Only available when Advanced mode LAC page 50 is set to On.
*: Write only when the soft starter is stopped

Code	Name/Description	R/W	Adjustment range	Factory setting
COP	**Advanced communication menu**			
Add oFF 1 to 247	❑ **Modbus address** ☐ off ☐ Modbus address **Note:** the modification will be taken into account only at the next control power-on.	R/W*	1..247	oFF
tbr	❑ **Modbus baudrate** **Note:** the modification will be taken into account only at the next control power on. With the remote keypad, set 19.2 Kbps	R/W*	4.8, 9.6, 19.2 Kbps	19.2 Kbps
For 8o1 8E1 8n1 8n2	❑ **Modbus format** ☐ 8 bit, odd parity, 1 stop bit ☐ 8 bit, even parity, 1 stop bit ☐ 8 bit, no parity, 1 stop bit ☐ 8 bit, no parity, 2 stop bit **Note:** the modification will be taken into account only at the next control power-on. With the remote keypad, set 8E1	R/W*		8E1
ttO	❑ **Modbus time out** **Note:** 0.1s on keypad becomes 1 with Modbus (1/10th s value with Modbus). Trip message is SLF. **⚠ WARNING** **LOSS OF CONTROL** Check that the selection of Modbus time out will not endanger personnel or equipment in any way. **Failure to follow this instruction can result in death or serious injury or equipment damage.**	R/W*	0.1..60.0 s	5.0 s
CtrL LCL dbS	❑ **Command channel** ☐ local command: with the control terminals ☐ remote command: Modbus **Note:** During soft start and soft stop, parameters values written by Modbus are not taken into account. LI1 must be activated (LI1 = 1) to allow the remote command.	R/W*		LCL

(1) Only available when Advanced mode LAC page 50 is set to On.
*: Write only when the soft starter is stopped.

Code	Name/Description	R/W	Range
SUP	**Advanced monitoring menu**		
StPr	❑ **Last starting time** Starting time is the duration to start the motor.	R	0-999 s
SICL	❑ **Last start maximum current** Displays last starting maximum current.	R	0-999 A
LFt	❑ **Last trip** Displays last trip message. See trip codes page 75.	R	-
dICL	❑ **Trip current** Displays motor current value upon last trip.	R	0-999 A
rnt	❑ **Total run time** Displays motor total run time.	R	hours
Stnb	❑ **Total number of starts** Displays total number of starts.	R	-
dEFt	❑ **Total number of trips** Displays total number of trips.	R	-
dEF1	❑ **Trip history 1** Displays the trip message occurred before LFt.	R	-
dEF2 (1)	❑ **Trip history 2** Displays the trip message occurred before dEF1.	R	-
dEF3 (1)	❑ **Trip history 3** Displays the trip message occurred before dEF2.	R	-
dEF4 (1)	❑ **Trip history 4** Displays the trip message occurred before dEF3.	R	-
dEF5 (1)	❑ **Trip history 5** Displays the trip message occurred before dEF4.	R	-
dEF6 (1)	❑ **Trip history 6** Displays the trip message occurred before dEF5.	R	-
dEF7 (1)	❑ **Trip history 7** Displays the trip message occurred before dEF6.	R	-
dEF8 (1)	❑ **Trip history 8** Displays the trip message occurred before dEF7.	R	-
dEF9 (1)	❑ **Trip history 9** Displays the trip message occurred before dEF8.	R	-

(1) Only available when Advanced mode LAC page 50 is set to On.

Code	Name/Description	R/W	Adjustment range	Factory setting
UtIL (1)	**Utility menu**			
tEST	❑ **Soft starter self test** Result Good BAd. Possible causes : - Improper internal voltage, - Checksum error, - Disconnected keyboard, - Disconnected heatsink thermal sensor, - Disconnected bypass relay (frame size C). If the detected fault persists, contact Schneider Electric product support.	R/W*	On oFF	
UdP	❑ **Soft starter software version** Two first digits: version Two last digits: sub version	R	0000..9999	
FCS	❑ **Back to factory settings** **⚠ DANGER** **UNINTENDED EQUIPMENT OPERATION** Check that the modification of the current configuration is compatible with the wiring diagram used. **Failure to follow these instructions will result in death or serious injury.** After press "Enter", SUrE is displayed. After press "Enter", parameters go back to factory settings.	R/W*		
rPr	❑ **Reset of trip history and counters** After press "Enter", SUrE is displayed. After press "Enter", trip history and counters are reset (rnt, dEF1 to dEF9 in the SUP menu).	R/W*		

*: Write only when the soft starter is stopped

(1) Accessible, except motor in run state, using the key shortcut

ESC + ▲

Command channel: local or remote command

A command channel gives the possibility to command the motor by the soft starter (start, stop…).
it can also read or write parameters.

In local command mode, the Altistart 22 can be set from the display terminal:
- Use the 4 keys to enter into the menu.

In remote command, the Altistart 22 soft starter can be set from the remote keypad:
- The remote keypad can be used in a similar way than the embedded keypad, it means that the HMI on the remote keypad has the same behavior as the HMI on the product.

Note: Some command channels can also read or write parameters.

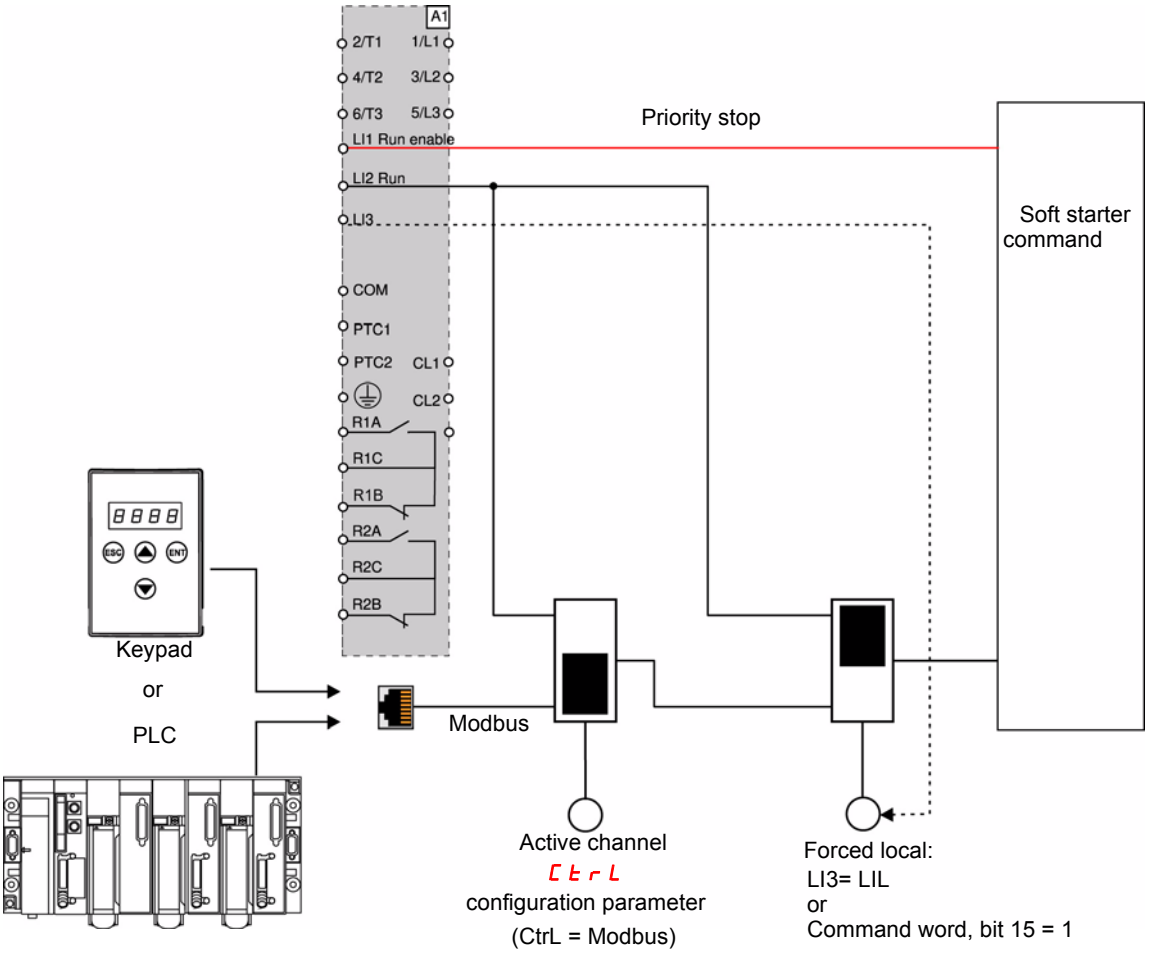

In this example, LI3 is configured to forced local command (LIL).

If CtrL = Modbus + forced local: it's forced local in first.

LOCAL mode: The soft starter is entirely controlled via the terminals. The parameters can be read and written via Modbus. The soft starter remains in LOCAL mode as long as the CtrL = 0.

FORCED LOCAL mode: The soft starter is entirely controlled via the terminals. Write access to the parameters from the Modbus link is prohibited. Reading is possible.

Note: LI1 must be activated (LI1 = 1) to allow the remote command.
A switch can be used on LI1 if a local stop by the terminal is needed. In this case, the stop will be in freewheel.

Behavior on channel change

In the COP menu (Advanced communication), the active channel can be changed via CtrL parameter:

Code	Name	Range	Default value
CtrL	command channel	0: local command 1: Remote command: Modbus	0

CtrL parameter is a configuration parameter that can be modified when the motor is stopped.

In the IO menu (Advanced IO), a Logic input can be assigned to local command: :

Code	Name	Value
LI2 or LI3	Logic input 2 or logic input 3	LIL: Forced Local command

The local remote input is active at level 1.
When the input local remote is active, the active command channel is the local channel.
When the local force function is active from a Logic input, the parameters can only be written by the local HMI or the external keypad. If written by Modbus function 6 or 16, the exception 1 bad function is sent back.
When the local force function is active, Modbus command word and parameters can be written also by Modbus.

The Logic input assign to "Forced local command" has the priority on bit 15 from Modbus command word. If LI3 is assigned to LIL and LI3=1, even if bit 15=1 the "Forced local command" is active.

When CTRL = Modbus and LI force local command activated, then a Modbus request 6 or 16 sends back an exception code 1 illegal function.

When on Modbus, only LI1 stop is taken into account.

Command word

The control register write definition is changed as follows:

The Altistart 22 incorporates one control register intended for controlling the Altistart 22.
Address: The control register address is: 752.
In order to control the Altistart 22 using the control register:

- Use Function 16 or function 6
- Use Address_High (page) = 2
- Use Address_Low = 240 (0F0H)
- Write to one register only
- Set comm_control (CtrL) to 1 for Modbus

Bit	Function	Comment
bit 0	RUN/STOP	Write "1" (On) to RUN Write "0" (oFF) to STOP, in configured stop (DEC parameter)
bit 1	reserved	
bit 2	reserved	
bit 3	trip reset	Write "1" to reset
bit 4	reserved	
bit 5	reserved	
bit 6	reserved	
bit 7	reserved	
bit 8	reserved	
bit 9	reserved	
bit 10	Freewheel stop	Write "1" to set freewheel deceleration, linked with bit 0
bit 11	2nd set of parameters	Write "1" to enable second set of parameters
bit 12	reserved	
bit 13	reserved	
bit 14	reserved	
bit 15	Forced local command	Write "1" (On) forces local command

Status word

The Status register address is: 256
- Use Function 3 only
- Use Address_High (page) = 1
- Use Address_Low = 0 (00H)
- Read one register only

Bit	Function	Comment
bit 0	Ready	All the conditions that will permit the operation of a switching device by the remote host controller have been fulfilled.
bit 1	On	The main circuit contacts are closed or the semiconductor switches of semiconductor switching device are in the conducting state (ACC, DEC and BYPASS).
bit 2	Trip	A trip condition exists.
bit 3	Warning	A warning condition exists.
bit 4	Reserved	
bit 5	LI3	
bit 6	LI2	
bit 7	LI1	
bit 8	(Motor current in %)	The motor current is expressed as a percentage of the motor rated current. Range is 0-200%. 6 bits code 200 % = 63 (decimal) = 111111 (binary)
bit 9		
bit 10		
bit 11		
bit 12		
bit 13		
bit 14	Local control	The indication to a remote host controller that as a result of operator intervention, commands received will not be accepted or acted upon (forced local command).
bit 15	Ramping	Accelerating or decelerating the motor.

Modbus Function

This section describes the connection to the bus or network, signaling, diagnostics, and configuration of the communication-specific parameters via the 7-segment LED display.
It also describes the communication services of the Modbus protocol.

Modbus Protocol

The transmission mode used is RTU mode. The frame contains no message header byte, nor end of message bytes.
It is defined as follows:

Slave address	Request code	Data	CRC16

The data is transmitted in binary code.
CRC16: cyclical redundancy check.
The end of the frame is detected on a silence greater than or equal to 3 characters.

Principle

The Modbus protocol is a master-slave protocol.

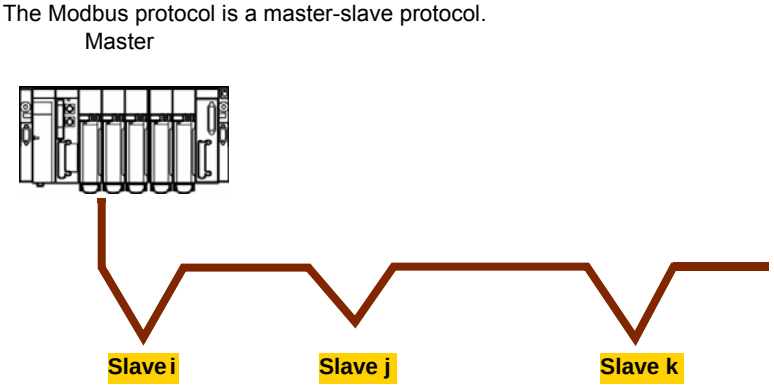

Direct slave-to-slave communications are not possible.

Only one device can transmit on the line at any time.
The master manages the exchanges and only it can take the initiative.
It interrogates each of the slaves in succession.
No slave can send a message unless it is invited to do so.
The master repeats the question when there is an incorrect exchange, and declares the interrogated slave absent if no response is received within a given time period.
If a slave does not understand a message, it sends an exception response to the master. The master may or may not repeat the request.

For slave-to-slave communication, the application software must therefore be designed to interrogate a slave and send back data received to the other slave.

Two types of dialogue are possible between master and slaves:
- the master sends a request to a slave and waits for its response
- the master sends a request to all slaves without waiting for a response (broadcasting principle)

Addresses

- The soft starter Modbus address can be configured from 1 to 247.
- Address 0 coded in a request sent by the master is reserved for broadcasting. ATS22 take account of the request, but do not respond to it.

Supported Modbus functions

The Altistart 22 supports the following Modbus functions.

Function name	Code	Description	Remarks
Read holding registers	03 16#03	Read N output words	Max PDU length : 63 words
Write one output word	06 16#06	Write one output word	
Write multiple registers	16 16#10	Write N output word	Max PDU length : 61 words
(Sub-function) Read device Identification	43 16#2B	Read device identification	

The following paragraphs describes each supported function.

Read Holding registers

Request

Function code	1 Byte	**0x03**
Starting Address	2 Bytes	0x0000 to 0xFFFF
Quantity of Registers	2 Bytes	1 to 63 (0x 3F)

Response

Function code	1 Byte	**0x03**
Byte count	1 Byte	2 x N*
Register value	N* x 2 Bytes	

*N: Quantity of Registers

Error

Error code	1 Byte	**0x83**
Exception code	1 Byte	01 or 02 or 03 or 04 (see details on page 72)

Example

Note: Hi = high order byte, Lo = low order byte.

This function can be used to read all ATS22 words, both input words and output words.

Request

Slave no.	03	No. of first word		Number of words		CRC16	
		Hi	Lo	Hi	Lo	Lo	Hi
1 byte	1 byte	2 bytes		2 bytes		2 bytes	

Response

Slave no.	03	Number of bytes read	First word value		-------	Last word value		CRC16	
			Hi	Lo		Hi	Lo	Lo	Hi
1 byte	1 byte	1 byte	2 bytes			2 bytes		2 bytes	

Example: read 2 words 'ACC and DEC at Modbus address 19 and 20 to W3105 (16#0013 to 16#0014) in slave 2, using function 3, where:

- ACC - Acceleration = 10
- DEC - Deceleration = 0

Request	02	03	0019	0002	CRC16	
Response	02	03	04	000A	0000	CRC16
		Value of:		W0019	W020	
		Parameters:		ACC	DEC	

Write one output word

Request

Function code	1 Byte	**0x06**
Register Address	2 Bytes	0x0000 to 0xFFFF
Register value	2 Bytes	0x0000 to 0xFFFF

Response

Function code	1 Byte	**0x06**
Register Address	2 Bytes	0x0000 to 0xFFFF
Register value	2 Bytes	0x0000 to 0xFFFF

Error

Error code	1 Byte	**0x86**
Exception code	1 Byte	01 or 02 or 03 or 04 (see details on page 72)

Example

Request and response (the frame format is identical)

Slave no.	06	Word number		Value of word		CRC16	
		Hi	Lo	Hi	Lo	Lo	Hi
1 byte	1 byte	2 bytes		2 bytes		2 bytes	

Example: write value 16#0008 in word W0022 (16#2329) in slave 2 Snb Number of starts 8.

Request and response	02	06	0016	0008	CRC16

Read Device Identification

ID	Name / Description	Type
0x00	VendorName	ASCII String
0x01	ProductCode	ASCII String
0x02	MajorMinorRevision	ASCII String

Example

Default values to be detailed

Request

Slave no.	2B	Type of MEI 0E	ReadDeviceId 01	Object Id 00	CRC16 Lo	CRC16 Hi
1 byte	1 byte	1 byte	1 byte	1 byte	2 bytes	

Response

Slave no.	2B	Type of MEI 0E	ReadDeviceId 01	Degree of conformity 02	-------
1 byte	1 byte	1 byte	1 byte	1 byte	

-------	Number of additional frames 00	Next object Id 00	Number of objects 03	-------
	1 byte	1 byte	1 byte	

-------	Id of object no. 1 00	Length of object no. 1 12	Value of object no. 1 “Schneider Electric”	-------
	1 byte	1 byte	18 bytes	

-------	Id of object no. 2 01	Length of object no. 2 0B	Value of object no. 2 “ATS22XXXXXX”	-------
	1 byte	1 byte	11 bytes	

-------	Id of object no. 3 02	Length of object no. 3 04	Value of object no. 3 “0201”	-------
	1 byte	1 byte	4 bytes	

-------	CRC16 Lo	CRC16 Hi
	1 byte	1 byte

The total response size equals 49 bytes

The three objects contained in the response correspond to the following objects:

- Object no. 1: Manufacturer name (always “Schneider Electric”, ie. 18 bytes).
- Object no. 2: Device reference (ASCII string; *for example:* “ATS22XXXXXX”, ie. 11 bytes).
- Object no. 3: Device version, in “MMmm” format where “MM” represents the determinant and “mm” the subdeterminant (4-bytes ASCII string; *for example:* “0201” for version 2.1).

Note: The response to function 43 may be negative; in this case, the response located at the top of the next page is sent by the Altistart 22 rather than the response described above.

Error management

Exception responses

An exception response is returned by a slave when it is unable to perform the request which is addressed to it.

Format of an exception response:

Slave no.	Response code	Error code	CRC16	
			Lo	Hi
1 byte	1 byte	1 byte	2 bytes	

Response code: request function code + 16#80.

Error code:
1 = The function requested is not recognized by the slave
2 = The bit or word addresses indicated in the request do not exist in the slave
3 = The bit or word values indicated in the request are not permissible in the slave
4 = The slave has started to execute the request but cannot continue to process it completely

CRC16 calculation

The CRC16 is calculated on all the message bytes by applying the following method:

Initialize the CRC (16-bit register) to 16#FFFF.

Enter the first to the last byte of the message:

```
        CRC     XOR     <byte> —> CRC
        Enter   8 times
                Move the CRC one bit to the right
                If the output bit = 1, enter CRC XOR 16#A001—> CRC
        End enter
End enter
```

The CRC obtained will be transmitted with the low order bytes sent first, followed by the high order ones (unlike the other data contained in Modbus frames).

XOR = exclusive OR.

Standard schematic

The standard schematic corresponds to the Modbus specification published on the Modbus.org site in 2002 (Modbus_over_serial_line_V1.pdf, Nov 2002) and in particular to the schematic of the 2-wire multidrop serial bus.

The ATS22 follows this specification.

Schematic diagram:

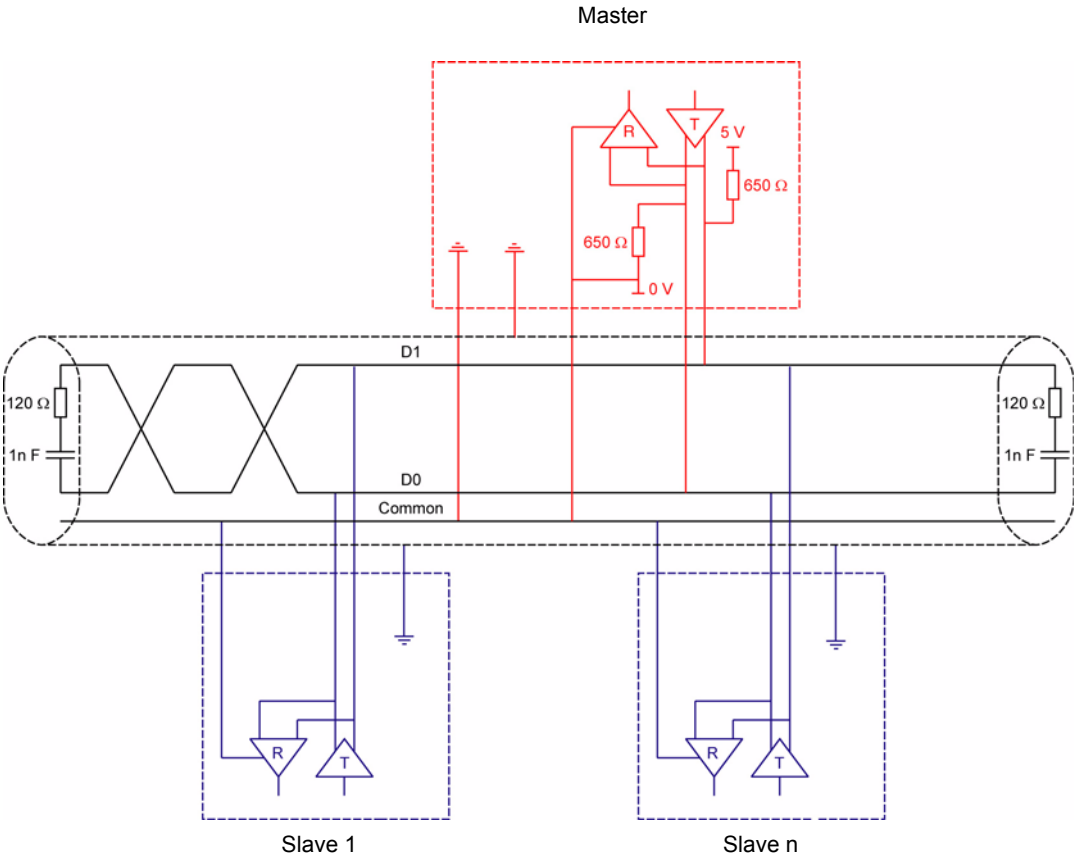

Type of trunk cable	Shielded cable with 1 twisted pair and at least a 3rd conductor
Maximum length of bus	1000 m at 19200 bps with the Schneider Electric TSX CSA●●● cable
Maximum number of stations (without repeater)	32 stations, ie. 31 slaves
Maximum length of tap links	• 20 m for one tap link • 40 m divided by the number of tap links on a multiple junction box
Bus polarisation	• One 450 to 650 Ω pulldown resistor at 5 V (650 Ω recommended) • One 450 to 650 Ω pulldown resistor at the Common (650 Ω recommended) This polarization is recommended for the master.
Line terminator	One 120 Ω 0.25 W resistor in series with a 1 nF 10 V capacitor
Common polarity	Yes (Common), connected to the protective ground at one or more points on the bus

Servicing

It is advisable to perform the following actions regularly:

- Check the condition and tightness of connections.
- Ensure that the temperature around the unit remains at an acceptable level and that ventilation is effective (average service life of fans: 3 to 5 years depending on the operating conditions).
- Ensure proper fan operation.
- Remove any dust from the soft starter.
- Check physical damages to the soft starter.

Spare parts and repairs

Consult Schneider Electric products support.

Soft starter does not start, no trip code displayed

- No display:
  - check that the line supply is present on the control supply CL1/CL2,
  - check if a short circuit is not existing on the Modbus network cable (especially between RJ45 pin 7 and RJ45 pin3 or pin8. See pages 35 and 36).
- Check that the code displayed does not correspond to the normal state of the soft starter (see page 46).
- Check for the presence of the RUN/STOP commands (see page 37).

Soft starter does not start, trip code displayed

- Trip code flashes on the display.
- Storing of the last 7 trips, visible with SoMove software workshop.
- The soft starter locks and the motor stop with to freewheel mode.

⚠ ⚠ DANGER

HAZARD OF ELECTRIC SHOCK, EXPLOSION, OR ARC FLASH

- Read and understand the precautions in "Before you begin" chapter, before performing any procedure in this section.

Failure to follow these instructions will result in death or serious injury.

Trip code displayed	Name	Remedy
bPF	Bypass contactor detected fault	• Switch-off the soft starter and contact Schneider Electric services.
CFF	Invalid configuration on power-up	• Revert to the factory setting in the soft starter UtIL menu • Reconfigure the soft starter
EtF	External detected fault	• Clear the cause of the detected fault
GrdF	Ground leakage current detected fault	• Check the electrical insulation of the motor • Check the installation • Check the values of Grdd, Grdt parameters in PrO menu page 57
InF	Internal detected fault	• Disconnect and reconnect the control supply. If the detected fault persists, contact Schneider Electric product support
OCF	Motor overcurrent	• Check the values of OId and OIt parameters in PrO menu page 56
OHF	Over heat detected fault Low temperature detected fault	• Check the sizing of the soft starter in relation to the motor and the mechanical requirement • Check the operation of the fan (if the Altistart 22 used has one), ensuring that the air passage is not obstructed in any way and the heatsink is clean. Ensure that the mounting recommendations are observed • Wait for the Altistart 22 cooling before restarting.
OLF	Overload motor	• Check the mechanism (wear, mechanical play, lubrication, blockages, etc.) • Check the sizing of the soft starter motor in relation to the mechanical requirement • Check the value of tHP parameter in SEt menu page 52 and In parameter in conF menu page 50 • Wait for the motor to cool before restarting, keeping the starter powered on.
OSF	Overvoltage	• Check ULn parameter in conF menu • Check the power supply circuit and voltage • Check OSd and OSt parameters in PrO menu
OtF	Motor Over Temperature • Motor thermal trip detected by the PTC probes	• Check the mechanism (wear, mechanical play, lubrication, blockages, etc.) • Check the sizing of the soft starter motor in relation to the mechanical requirement • Check the value of PtC setting in PrO menu page 59 • Wait for the motor to cool before restarting

Trip code displayed	Name	Remedy
PHbd	Phase unbalance	• Check the line voltage. • Check the values of Ubd, Ubt parameters in PrO menu page 57.
PHF	Loss of a line phase	• Check the line voltage, the connection to the soft starter and any isolating devices located between the line and the soft starter (contactors, fuses, circuit breakers, etc.). • Check the motor connection and any isolating devices located between the soft starter and the motor (contactors, circuit breakers, etc.). • Check the motor state.
	Line frequency, out of tolerance This detected fault can be configured in PrO menu	• Check the line frequency. • Check the configuration of PHL.
PIF	Phase inversion Line phase inversion does not conform to the selection made by PHr in PrO menu	• Invert two lines phases or set PHr = oFF.
trAP	Trap code	• Disconnect and reconnect the control supply. If the detected fault persists, contact Schneider Electric support.
SCF	Short circuit: • short-circuit on soft starter output	• Switch-off the soft starter. • Check the motor connections and the motor insulation. • If connections and insulation are OK, contact Schneider Electric services.
SLF	Modbus Time Out	• Serial link detected fault. Check the RS485 connection.
SnbF	Too many starts	• The number of soft starts has exceeded the maximum allowed by Snb in SLG period. See Snb page 53.
SSCr	Shorted thyristor or wrong connection	• Switch-off the soft starter. • Check the motor connections and the motor insulation. • If connections and insulation are OK, contact Schneider Electric services.
StF	Starting time detected fault • Too long start time	• Check the mechanism (wear, mechanical play, lubrication, blockages, etc.) • Check that tLS (Max start time) is bigger than ACC (Acceleration time). See SEt menu page 51. • Check the sizing of the soft starter motor in relation to the mechanical requirement • Check ILt value : if the value is too low, the motor may not reach acceleration and full speed.
tbS	Too many starts	• Wait 5 minutes for frame size A. • Wait 15 minutes for frame sizes B, C, D and E. tbS appears after SnbF trip message, when trying to reset the soft starter before end of the timer.
UCF	Motor underload (undercurrent)	• Check the values of UId and UIt parameters in PrO menu page 57.
USF	Under voltage or no voltage	• Check UIn, USd and USt parameters in PrO menu • Check line voltage.

Remote keypad messages

Display		Message	Description
InIt		On initializing itself	Microcontroller initializing. Communication configuration searching.
COME	flashing	Communication interruption	It has 50 ms time out. This message is shown after 20 times retrying.
A-17	flashing	Key alarm	• Key has been held consecutively more than 10 seconds. • Membrane switch disconnected. • Keypad waked up while a key is holding.
CLr	flashing	Confirm trip reset	This is shown when : First time STOP key has been pressed while the soft starter has tripped in detected fault.
dEUE	flashing	Soft starter mismatch	Soft starter type (brand) did not match with keypad type (brand).
rOME	flashing	ROM trip	Keypad ROM detected fault.
rAME	flashing	RAM trip	Keypad RAM detected fault.
CPUE	flashing	CPU trip	Keypad CPU detected fault.

Parameter Index and Modbus addresses

Code	Page	Name	Unit	Modbus code and Adjustment Range (1)	Description	Modbus address	Factory setting	User setting
ACC	52	Acceleration time	s	1 to 60	-	19	10	
ACC2	55	2nd acceleration time	s	1 to 60	-	42	10	
Add	62	Modbus address	-	0 = oFF 1 to 247	off Modbus address	80	oFF	
bSt	53	Boost time	s	0.0 to 1.0	1 with Modbus = 0.1s	34	0	
Cod	50	Setting lock	-	0 = nLOC 1 = LOC	not locked locked	4	nLoc	
CtrL	62	Command channel	-	0 = LCL 1 = dbS	0 – Local (LCL) 1 – Modbus (dbS)	84	LCL	
dEC	52	Deceleration time	s	0 = FrEE 1 to 60	freewheel deceleration -	20	FrEE	
dEC2	55	2nd deceleration time	s	0 = FrEE 1 to 60	freewheel deceleration -	43	FrEE	
dEF1	63	Trip history 1	-	01 = UCF 02 = OCF 03 = PHbd 04 = GrdF 05 = OLF 06 = OtF 07 = OHF 08 = PIF 09 = PHF 10 = USF 11 = OSF 12 = StF 13 = SnbF 14 = SSCr 15 = EtF 16 = InF 17 = SLF 18 = trAP 19 = SCF 20 = bPF 21 = CFF	01 = Motor underload (undercurrent) 02 = Motor overcurrent 03 = Phase unbalance 04 = Ground leakage current detected fault 05 = Overload motor 06 = Motor Over Temperature 07 = Over heat detected fault 08 = Phase inversion 09 = Loss of a line phase 10 = Under voltage or no voltage 11 = Over Voltage 12 = Starting time detected fault 13 = Too Many Starts 14 = Shorted thyristor or wrong connection 15 = External detected fault 16 = Internal detected fault 17 = Modbus Time Out 18 = Trap code 19 = Short-circuit 20 = Bypass contactor detected fault 21 = Invalid configuration on power-up	282	-	
dEF2	63	Trip history 2	-			283	-	
dEF3	63	Trip history 3	-			284	-	
dEF4	63	Trip history 4	-			285	-	
dEF5	63	Trip history 5	-			286	-	
dEF6	63	Trip history 6	-			287	-	
dEF7	63	Trip history 7	-			288	-	
dEF8	63	Trip history 8	-			289	-	
dEF9	63	Trip history 9	-			290	-	
dEFt	63	Total number of trips	-	-	-	278	-	
dICL	63	Trip current	A	0 to 999	-	280	-	
dLtA	50	Connection type	-	0 = LInE 1 = dLt	in line connection inside delta connection	1	LInE	
EdC	52	End of deceleration	-	0 to 10	-	21	0	
FAn	61	Fan management	-	0 = AUto 1 = On 2 = oFF 3 = HAnd	auto on off manual	76	AUto	
FCS	64	Back to factory settings	-	1	= 1 to perform FCS	130	-	

(1) Modbus code = Soft starter message
example : oFF on the soft starter will be equivalent to "0" with Modbus protocol (remote command)
* : parameter visible only with Modbus

Code	Page	Name	Unit	Modbus code and Adjustment Range (1)	Description	Modbus address	Factory setting	User setting
For	62	Modbus format	-	0 = Bo 1 1 = BE 1 2 = Bn 1 3 = Bn2	8 bit, odd parity, 1 stop bit 8 bit, even parity, 1 stop bit 8 bit, no parity, 1 stop bit 8 bit, no parity, 2 stop bit	82	BE 1	
Freq*		Frequency	Hz	-	-	265	-	
Grdd	57	Ground leakage current threshold	% of In	10 to 100 10 1 = oFF	- Off	54	25 for S6 and S6U OFF for Q	
Grdt	57	Ground leakage current time delay	s	1 to 60	-	55	5	
IcL	50	Soft starter rated current	A	-	-	0	Read from the power card's serial EEPROM	
IG*		Integral gain	%	0 to 100%	This parameter is reserved for expert mode. Active when SSC = On	38	20	
ILt	51	Current limit	% of In	200 to 700% max. value: 350% of IcL	-	17	350	
ILt2	55	2nd current limit	% of In	200 to 700% max. value: 350% of IcL	-	41	350	
In	50	Motor rated current	A	0.4 IcL to IcL	-	3	According to the soft starter rating	
In2	55	2nd motor rated Current	A	0.4 IcL to IcL	-	44	According to the soft starter rating	
ItH	59	Overload protection	-	0 = oFF 1 = rUn 2 = On	off run on	63	On	
LAC	50	Advanced mode	-	0 = oFF 1 = On	off on	5	oFF	
LCr1	47	LCr1		Phase 1 Current, Amp		257		
LCr2	47	LCr2		Phase 2 Current, Amp		258		
LCr3	47	LCr3		Phase 3 Current, Amp		259		
LED*		LEDS Status		d4: COMM LED (0=OFF,1=ON) d6: Ready LED (0=OFF,1=ON) d7: Run LED (0=OFF,1=ON). Flashing during soft start / soft stop. d8: Trip LED (0=OFF,1=ON) Note: other bits are reserved.		269		
LFt	63	Last trip	-	same as dEF1 to dEF9		279	-	

(1) Modbus code = Soft starter message
example : oFF on the soft starter will be equivalent to "0" with Modbus protocol (remote command)
* : parameter visible only with Modbus

Parameter Index and Modbus addresses

Code	Page	Name	Unit	Modbus code and Adjustment Range (1)	Description	Modbus address	Factory setting	User setting
LI*		Logical inputs		d0: Input 1. 0 – open, 1 – closed. d1: Input 2. d2: Input 3. d3...d15: Reserved		261		
LI2	60	Logic input 2	-	0 = Strt 1 = rUn 2 = 2nd 3 = EtF 4 = rSt 5 = FAn 6 = FI 7 = LIL	start:for a 3-wire control run:for a 2-wire control 2nd set of parameters external detected fault remote reset fan control trip inhibition forced local command	72	rUn	
LI3	60	Logic input 3	-	2 = 2nd 3 = EtF 4 = rSt 5 = FAn 6 = FI 7 = LIL	2nd set of parameters external detected fault remote reset fan control trip inhibition forced local command	73	rSt	
Lo	47	Logic Output relays status		d0: Relay 1. 0 – not energized, 1 - energized d1: Relay 2 d2...d15: reserved		262		
OIt	57	Overcurrent time delay	s	0 to 50 s	5 with Modbus = 0.5s 50 with Modbus = 5.0s	51	0.5	
OId	56	Overcurrent threshold	% of In	100 to 300, by increment of 5	-	50	200	
OSd	59	Over voltage threshold	% of UIn	110 to 125	-	60	120	
OSt	58	Under voltage time delay	s	I to I0	-	61	2	
PG*		Proportional gain	%	0 to 100%	This parameter is reserved for expert mode. Active when SSC = On	37	60	
PHL	58	Phase loss detection	-	0 = oFF 1 = On	off on	57	On	
PHr	57	Phase sequence	-	0 = 123 1 = 321 2 = oFF	123 321 off	56	oFF	
PtC	59	PTC probes motor monitoring	-	0 = oFF 1 = On	off on	62	oFF	

(1) Modbus code = Soft starter message
example : oFF on the soft starter will be equivalent to "0" with Modbus protocol (remote command)

* : parameter visible only with Modbus

Code	Page	Name	Unit	Modbus code and Adjustment Range (1)	Description	Modbus address	Factory setting	User setting
r1	61	Relay 1	-	0 = StPd 1 = nStP 2 = Strt 3 = rUn 4 = rdY 5 = trIP 6 = ALr	stopped not stopped starting running ready trip alarm	74	nStP	
r2	61	Relay 2	-	as r1	as r1	75	trIP	
rnt	63	Total run time	hours	-	-	273	-	
rPr	64	Reset of trip history and counters	-	-	-	NA	-	
SICL	63	Last start maximum current	A	0 to 999	-	276	-	
SLG	53	Starts period	min	1 to 60	-	33	30	
Snb	53	Number of starts	-	1 to 10 11 = oFF	Number of starts off	32	oFF	
SPCU	54	Start-stop profile control voltage	-	0 1 2 3	0 1 2 3	36	0	
SSC	54	Start-stop control	-	0 = oFF 1 = On	off on	35	On	
Stnb	63	Total number of starts	-	-	-	274	-	
StPr	63	Last starting time	s	0 to 999	-	275	-	
t90	51	Initial voltage	%	10 to 50% of full voltage, by increment of 5	-	16	30%	
t92	55	2nd initial voltage	%	10 to 50% of full voltage UIn, by increment of 5	-	40	30%	

(1) Modbus code = Soft starter message
example : oFF on the soft starter will be equivalent to "0" with Modbus protocol (remote command)

* : parameter visible only with Modbus

Parameter Index and Modbus addresses

Code	Page	Name	Unit	Modbus code and Adjustment Range (1)	Description	Modbus address	Factory setting	User setting
tbr	62	Modbus baudrate	Kbps	0 = 4.8 1 = 9.6 2 = 19.2	-	81	19.2	
tESt	64	Soft starter self test	-	on off	on off	NA	-	
tHP	52	Motor thermal protection	-	1 = 10 2 = 20 3 = 30	class 10 class 20 class 30 (heavy duty)	22	10	
tLS	51	Max start time	s	1 to 250	-	18	15	
ttO	62	Modbus time out	s	1 = 0.1 to 600 = 60.0	1 with Modbus = 0.1s 600 with Modbus = 60.0s	83	5.0	
Ubd	57	Unbalance threshold	% of In	101 = oFF 10 to 100%	-	52	25	
Ubt	57	Unbalance time delay	s	1 to 60	-	53	10	
UdP	64	Soft starter software version	-	0000 to 9999	-	317		
UId	56	Under current threshold	% of In	0 = oFF 20 to 90% of In	-	48	oFF	
UIn	50	Line voltage	V	Q range: 200 to 440 S6-S6U ranges: 200 to 600	-	2	Q range: 400 S6-S6U ranges: 480	
UIt	56	Under current time delay	s	1 to 40	-	49	10	
USd	58	Under voltage threshold	% of In	50 to 90% of UIn	-	58	70	
USt	58	Under voltage time delay	s	1 to 10	-	59	5	
Voltage*		Voltage	V	Line voltage, volts		260		

(1) Modbus code = Soft starter message
example : oFF on the soft starter will be equivalent to "0" with Modbus protocol (remote command)

* : parameter visible only with Modbus

ATS22•••Q or ATS22•••S6: 230 V, 2-wire control, freewheel stop

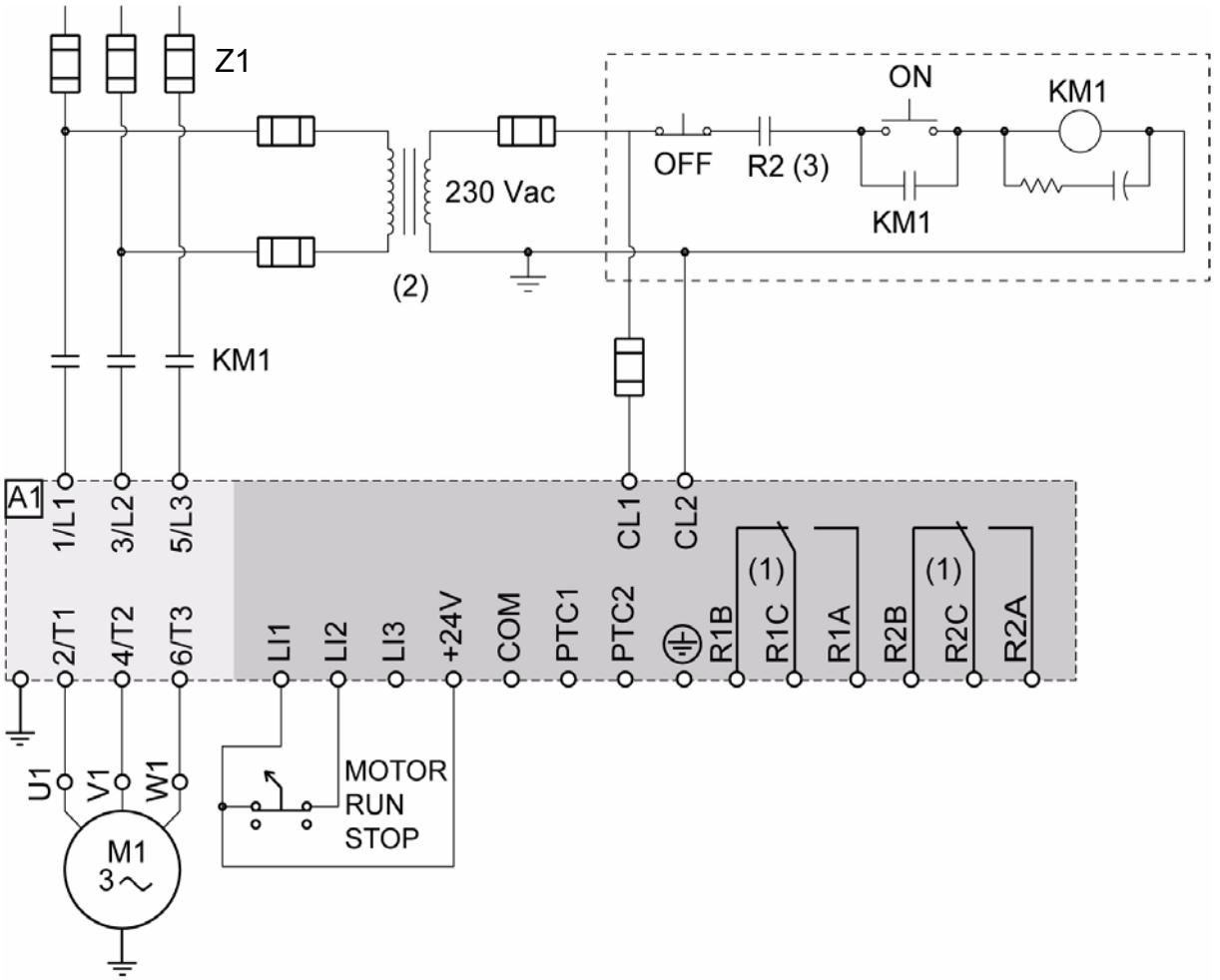

(1) Check the operating limits of the contact, for example when connecting to high rating contactors. See “Electrical characteristics” page 35.
(2) Insert a voltage transformer if the power voltage is higher than the Altistart 22 acceptable value. Characteristics: min 100 VA page 13.
(3) Detected fault trip relay

2-wire control setting

In the menu Advanced I/O IO, set the following parameters:

Parameter	Value	Description
LI2	run	Logic Input 2 is set to Run
r2	trIP	Trip relay is de-energized upon trip

ATS22•••S6U: 110V, 2-wire control, freewheel stop

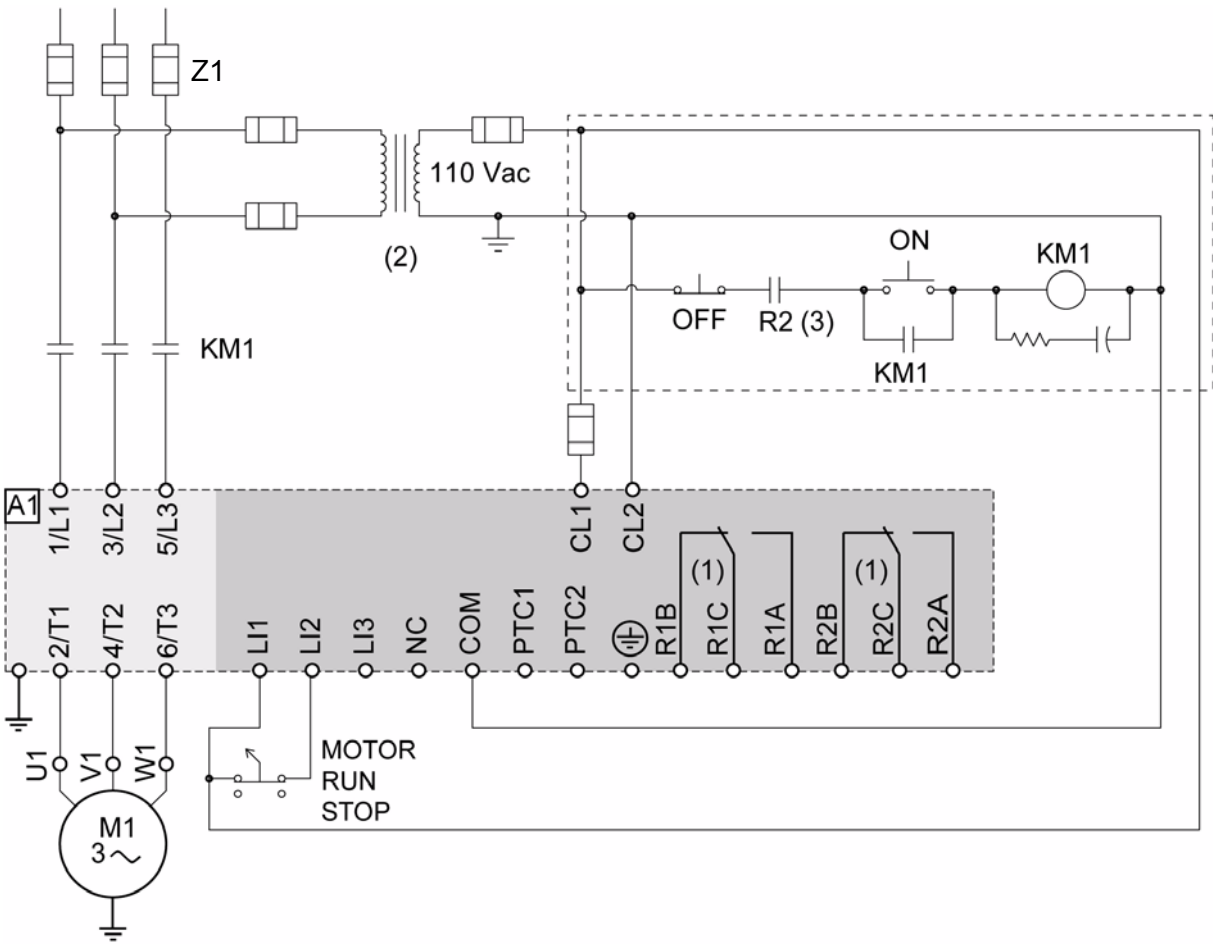

(1) Check the operating limits of the contact, for example when connecting to high rating contactors. See “Electrical characteristics” page 36.
(2) Insert a voltage transformer if the power voltage is higher than the Altistart 22 acceptable value. Characteristics: min 100 VA page 13.
(3) Detected fault trip relay

2-wire control setting

In the menu Advanced I/O I O, set the following parameters:

Parameter	Value	Description
L I2	r U n	Logic Input 2 is set to Run
r 2	t r I P	Trip relay is denergized upon trip